APPLICATION MANUAL

COMBIVERT F4-C

KEB
ANTRIEBSTECHNIK

Charge 75,-DM

Art.Nr.: 0C.F4.0EA-K220

Stand 01/99

© KEB Antriebstechnik, 1997
All Rights reserved

1. Introduction	This chapter shall allow a fast access to the wanted information. It consists of contents, index and search criterion.
2. Summary	Here the inverter and its features as well as the operating conditions and application purpose are described.
3. Hardware	Description of hardware, technical data of the inverter as well as connection of power and control terminals.
4. Operation	The basic operation of the KEB COMBIVERT like password input, parameter and set selection.
5. Parameter	A list of all parameters classified according to parameter groups. The parameter description comprises addresses, value ranges and references with regard to the functions for which they are used.
6. Functions	To make the programming easier all inverter functions and the parameters belonging to it are comprised in this chapter.
7. Start-up	Gives support with regard to the initial start-up and shows possibilities and techniques for the optimization of the drive.
8. Special Operation	Describes special operating modes, like e.g. DC-coupling.
9. Error Assistance	Avoidance of errors, evaluation of error messages and elimination of the causes.
10. Project Planning	Survey of the possible interconnection in existing networks; address and value table for the implementation in own protocols.
11. Networks	Survey of the possible interconnection of the KEB COMBIVET in existing networks.
12. Applications	In this chapter you find descriptions of some applications which may give new impulses or help to solve own applications.
13. Annex	Everything that didn't fit anywhere else or what we didn't think of earlier.

© KEB Antriebstechnik, 1997
All Rights reserved

1. Introduction

2. Summary

3. Hardware

4. Operation

5. Parameter

6. Functions

7. Start-up

8. Special Operation

9. Error Assistance

10. Project Planning

11. Networks

12. Applications

13. Annex

1.1 General

1.1.1 Table of Contents 7
1.1.2 Preface 7
1.1.3 Record of Changes 9
1.1.4 Technical Terms 13
1.1.5 Characters and Symbols 15

1. Introduction
1.1 General
1.1.1 Table of Contents

1. Introduction 1.1.7
1.1 General 1.1.7
1.1.1 Table of Contents 1.1.7
1.1.2 Preface 1.1.13
1.1.3 Record of Changes 1.1.15
2. Overview 2.1.3
2.1 Product Description 2.1.3
2.1.1 Features of KEB COMBIVERT F4-C 2.1.3
2.1.2 Function Principle 2.1.3
2.1.3 Application as directed 2.1.4
2.1.4 Type Code 2.1.5
2.1.5 Validity of Specifications 2.1.6
2.1.6 Unit Sizes 230V-Class 2.1.6
2.1.7 Unit Sizes 400V-Class (10-17) 2.1.7
3. Hardware 3.1.3
3.1 Control Units 3.1.3
3.1.1 Survey 3.1.3
3.1.2 Control Cards 0A.F4.080-xxxx 3.1.4
3.1.3 Control Card 0D.F4.080-xxxx 3.1.5
3.1.4 Control Card 00.F4.080-xxxx 3.1.5
3.1.5 Control Terminal Strip 3.1.6
3.1.6 Wiring of Digital Inputs 3.1.7
3.1.7 Wiring of Analog Inputs 3.1.7
3.1.8 Wiring of Outputs 3.1.8
4. Operation 4.1.3
4.1 Fundamentals 4.1.3
4.1.1 Parameters, ... 4.1.3
4.1.2 Selection of a Parameter 4.1.4
4.1.3 Adjustment of Parameter Values 4.1.4
4.1.4 ENTER-Parameter 4.1.4
4.1.5 Non-programmable Parameters 4.1.5
4.1.6 Resetting of Error Messages 4.1.5
4.1.7 Resetting of Peak Values 4.1.5
4.1.8 Acknowledgement of Status Signals 4.1.5
4.2 Password Structure 4.2.3
4.2.1 Password Levels 4.2.3
4.2.2 Passwords 4.2.4
4.2.3 Changing of Password Level 4.2.4

4.3 CP-Parameter 4.3.3
4.3.1 Operation in CP-Mode 4.3.3
4.3.2 Factory Setting 4.3.3
4.3.3 Description of CP-Parameter 4.3.4
4.3.4 Status Display 4.3.4
4.3.5 Basic Setting of the Drive 4.3.5
4.3.6 Special Settings 4.3.7
4.4 Drive-Mode 4.4.3
4.4.1 Adjustment Possibilities 4.4.3
4.4.2 Display and Keyboard 4.4.3
4.4.3 Setpoint Display /Setpoint Input 4.4.3
4.4.4 Rotation Setting 4.4.4
4.4.5 Start / Stop / Run 4.4.4
4.4.6 Leaving the Drive-Mode 4.4.5
4.4.7 Further Settings 4.4.5
5. Parameter 5.1.3
5.1 Parameter 5.1.3
5.1.1 Parameter Groups 5.1.3
5.1.2 Parameter Listing F4-C 5.1.5
6. Functional Description 6.1.3
6.1 Operating and Appliance Displays 6.1.3
6.1.1 Summary of ru-Parameters 6.1.3
6.1.2 Summary of In-Parameters 6.1.3
6.1.3 Explanation to Parameter Description 6.1.4
6.1.4 Description of ru-Parameters 6.1.5
6.1.5 Description of In-Parameters 6.1.16
6.2 Analog In- and Outputs 6.2.3
6.2.1 Short Description Analog Inputs 6.2.3
6.2.2 Input Signals (An.6) 6.2.4
6.2.3 Noise Filter (An.1, An.7, An.26) 6.2.4
6.2.4 Buffer Memory (An.22) 6.2.5
6.2.5 Input characteristics Amplifier (An.3...5, An.9...11, An.23...25) 6.2.6
6.2.6 Zero Clamp Speed (An.2 /An.8 / An.27) 6.2.7
6.2.7 Selection Setpoint Value/ Aux Input (An.12) 6.2.7
6.2.8 Simulate Analog Option with ±REF (An.22 Bit 6) 6.2.7
6.2.9 Change Display Parameter (An.22 Bit 7) 6.2.8
6.2.10 Short Description Analog Output 6.2.8
6.2.11 Output Signals 6.2.8
6.2.12 Output characteristics amplifier (An.15, An.16, An.17) 6.2.9
6.2.13 Used Parameters 6.2.10

© KEB Antriebstechnik, 1997
All Rights reserved

6.3 Digital In- and Outputs 6.3.3
6.3.1 Short Description Digital Inputs 6.3.3
6.3.2 Input Signals PNP / NPN (di.1) 6.3.3
6.3.3 Terminal Status (ru.14) 6.3.4
6.3.4 Set Digital Inputs with Software (di.15, di.16) 6.3.4
6.3.5 Digital Filter (di.0) 6.3.5
6.3.6 Inverting of the Inputs (di.2) 6.3.5
6.3.7 Edge Triggering (di.14) 6.3.5
6.3.8 Strobe-dependent Inputs(di.17...di.19) 6.3.6
6.3.9 Mode of Rotation setting (di.20 Bit0) 6.3.7
6.3.10 Functional Assignment (di.3...di.10) 6.3.8
6.3.11 Input status (ru.16) 6.3.8
6.3.12 Reset-Mode ST (di.21) 6.3.8
6.3.13 Short Description - Digital Outputs 6.3.9
6.3.14 Output Signals 6.3.10
6.3.15 Output Conditions (do.1...do.4) 6.3.10
6.3.16 Inverting Output Conditions do.17...do.24 ..... 6.3.12
6.3.17 Selection Output Conditions (do.9...do.16) 6.3.12
6.3.18 Output Condition Interconnection (do.25) 6.3.12
6.3.19 Inverting of the Outputs (do.0) 6.3.13
6.3.20 Output Terminal Status (ru.15) 6.3.13
6.3.21 Used Parameters 6.3.13
6.4 Set Value and Ramp Adjustment 6.4.3
6.4.1 Short Description 6.4.3
6.4.2 AUX-Function 6.4.4
6.4.3 Set Value Limits 6.4.9
6.4.4 Set Value Calculation 6.4.10
6.4.5 Fixed Frequencies (oP.22...24) 6.4.11
6.4.6 Ramp Generator 6.4.12
6.4.7 Used Parameters 6.4.18
6.5 Voltage-/Frequency Characteristic 6.5.3
6.5.1 Maximal Frequency Mode (ud.11) 6.5.3
6.5.2 Rated Point (uF.0) and Boost (uF.1) 6.5.3
6.5.3 Additional Rated Point (uF.2/uF.3) 6.5.3
6.5.4 Delta Boost (uF.4/uF.5) 6.5.4
6.5.5 UZK-Compensation (uF.8) 6.5.4
6.5.6 Modulation 6.5.5
6.5.7 Operating Frequency (uF.11) 6.5.6
6.6 Motor Presetting 6.6.3
6.6.1 Motor Rating Plate 6.6.3
6.6.2 Motor Data from Rating Plate (dr.1...dr.4, dr.12) 6.6.3
6.6.3 Motor Data from Data Sheets (dr.22) 6.6.3
6.6.4 Motor Stator Resistance (dr.5) 6.6.4

6.7 Keep on Running Functions 6.7.3
6.7.1 Ramp Stop and Hardware Current Limit 6.7.3
6.7.2 Maximum Constant Current (Stall-function) 6.7.5
6.7.3 Automatic Restart and Speed Search 6.7.7
6.7.4 Electronic Motor Protection 6.7.9
6.7.5 Dead Time Compensation (uF.17) 6.7.11
6.7.6 Base-Block Time 6.7.11
6.8 Parameter Sets 6.8.3
6.8.1 Non-programmable Parameters 6.8.3
6.8.2 Copying of Parameter Sets (Fr.0, Fr.1, Fr.9) 6.8.3
6.8.3 Selection of Parameter Sets 6.8.4
6.8.4 Locking of Parameter Sets 6.8.6
6.8.5 Parameter Set ON and OFF Delay (Fr.5, Fr.6) 6.8.7
6.8.6 Used Parameters 6.8.7
6.9 Special Functions 6.9.3
6.9.1 DC-Brake 6.9.3
6.9.2 Energy Saving Function 6.9.5
6.9.3 Power-Off Function 6.9.7
6.9.4 Motor Potentiometer Function 6.9.13
6.9.5 Timer Programming 6.9.17
6.9.6 Braking Control 6.9.19
6.9.7 Unit Conversion 6.9.23
6.10 Encoder Interface 6.10.3
6.10.1 Encoder Summary 6.10.3
6.10.2 Encoder Interface with 2nd Encoder 6.10.4
6.10.3 Encoder Interface with Tacho Generator evaluation 6.10.6
6.10.4 Encoder Interface with ±10V Input 6.10.6
6.10.5 Encoder Interface with Initiator Input 6.10.6
6.10.6 Speed Measurement 6.10.7
6.10.7 Evaluation of Incremental Encoders 6.10.8
6.10.8 Evaluation of Tacho Generators 6.10.9
6.10.9 Evaluation of Initiators 6.10.10
6.10.10 Gearbox Factors 6.10.10
6.10.11 Error Message E.co1/E.co2 ..... 6.10.10
6.10.12 Definition of Actual Value Channel (cn.3) 6.10.10
6.10.13 Frequent Errors 6.10.11
6.10.14 Used Parameters 6.10.11
6.11 PI-Controller 6.11.3
6.11.1 The PI-Controller 6.11.3
6.11.2 Controller Selection (cn.0) 6.11.4
6.11.3 Autoboost and Slip Compensation 6.11.6
6.11.4 Set Value Calculation % 6.11.7
6.11.5 Actual Value Calculation % 6.11.9
6.11.6 Diameter Compensation 6.11.10
6.11.7 Controller Action and Limiting 6.11.11
6.11.8 Used Parameters 6.11.12

6.12 CP-Parameter Definition 6.12.3
6.12.1 Survey 6.12.3
6.12.2 Assignment of CP-Parameter 6.12.4
6.12.3 Start Parameter (ud.2, ud.3) 6.12.4
6.12.4 Example 6.12.5
6.12.5 Used Parameters 6.12.5
7. Start-up 7.1.3
7.1 Preparatory Measures 7.1.3
7.1.1 After unpacking the Goods 7.1.3
7.1.2 Installation and Connection 7.1.3
7.1.3 Checklist prior to Start-up 7.1.4
8. Special Operation 8.1.2
9. Error Assistance 9.1.3
9.1 Troubleshooting 9.1.3
9.1.1 General 9.1.3
9.1.2 Error Messages and their Cause 9.1.3
10. Project Planning 10.1.3
10.1 General Design 10.1.3
10.1.1 Control Cabinet Design Calculation 10.1.3
10.1.2 Design of Braking Resistors 10.1.4
11. Networks 11.1.3
11.1 Network Components 11.1.3
11.1.1 Available Hardware 11.1.3
11.1.2 RS232-Cable PC/Inverter 11.1.3
11.1.3 Interface- and Bus-Operator 11.1.4
11.1.4 Optical Fibre BUS 11.1.5
11.1.5 InterBus Loop-Operator 11.1.9
11.2. Bus-/DRIVECOM-Parameter 11.2.3
11.2.1 Adjustment of Inverter Address (ud.6) 11.2.3
11.2.2 Baud Rate (ud.7) 11.2.3
11.2.3 Watchdog-Time (ud.8) 11.2.3
11.2.4 DRIVECOM 11.2.4
11.2.5 Activating Profile Parameters 11.2.4
11.2.6 Profile Parameters 11.2.4
11.2.7 Status and Control Word 11.2.8
12. Applications 12.1.2
13. Annex 13.1.3
13.1 Search and Find 13.1.3
13.1.1 Index 13.1.3
13.1.2 Term Definition 13.1.9
13.1.3 KEB-Worldwide 13.1.11
13.1.4 Domestic Representations 13.1.12
13.1.5 Notes 13.1.13

1.1.2 Preface

Who shall read all this?
Everybody who is entrusted with the development and construction of applications. He who knows the extensive programming possibilities of the COMBIVERT, can save external controls and expensive cabling already in the planning stage of a machine simply by using the unit as active control element. This manual is **not** a replacement of the documentation accompanying the unit, it serves only as completion.

1000 and one application...
and if possible with one unit. Who does not know this demand from purchasing departments, production or service. We have taken this request very seriously and developed a series with open programming, which can be adapted to the different applications with PC, chipcard or manually.

Nobody can handle this...
some sceptics may say. But we have found a solution to this too. Once the development stage of a machine is completed only a few adjustment possibilities are needed on the inverter and in some cases even none at all. So why should all parameters still be visible? Said and done, by defining an own menu only selected parameters are visible. This makes the handling much easier, simplifies the user documentation and improves the safety of operation against unauthorized access (see picture 1.1.2).

Picture 1.1.2

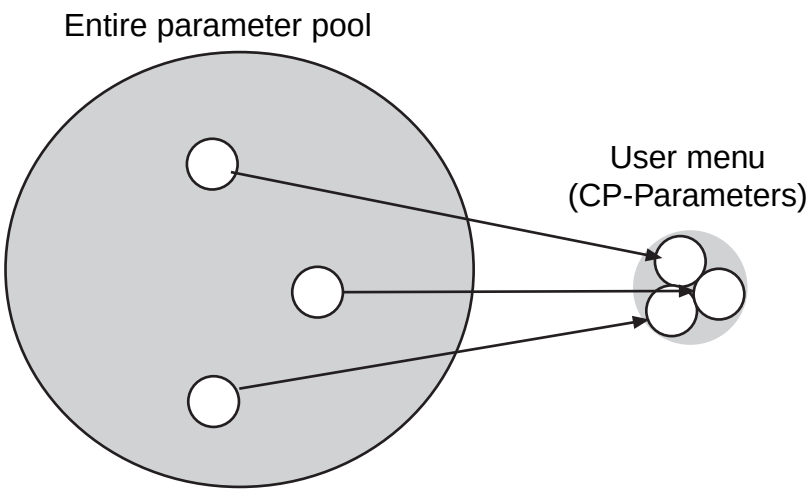

© KEB Antriebstechnik, 1997
All Rights reserved

1.1.3 Record of Changes

No.	Typ*)	Date	Name	Description
1	B	01.02.1998	KEB COMBIVERT F4-C	-
2	E	10.11.1998	Chapter 6.1	Page 18
3	E	10.11.1998	Chapter 6.3	Page 11
4	E	10.11.1998	Chapter 6.4	Page 5
5	E	10.11.1998	Chapter 6.9	Page 15
6	E	19.11.1998	Chapter 6.10	Page 7
7	E	23.11.1998	Chapter 6.7	Page 10
8	E	23.11.1998	Chapter 6.10	Page 9
9	E	05.01.1999	Chapter 1.1	Page 1-11
10	E	14.01.1999	Chapter 6.11	Page 7
11	E	15.01.1999	Chapter 11.1	Complete
12	E	18.01.1999	Chapter 2.1	Page 6-8
13	E	20.01.1999	Chapter 13.1	Page 13-15

* Typ: (B)ase; (N)ew; Chang(e); (A)ddition

1. Introduction

2. Summary

2.1 Product Description

2.1.1 Features of KEB COMBIVERT F4-C 3
2.1.2 Function Principle 4
2.1.3 Application as directed 4
2.1.4 Type Code 5
2.1.5 Validity of Specifications 6
2.1.6 Unit Sizes 230V-Class 6
2.1.7 Unit Sizes 400V-Class 7

3. Hardware

4. Operation

5. Parameter

6. Functions

7. Start-up

8. Special Operation

9. Error Assistance

10. Project Planning

11. Networks

12. Applications

13. Annex

2. Overview

2.1 Product Description

2.1.1 Features of KEB COMBIVERT F4-C

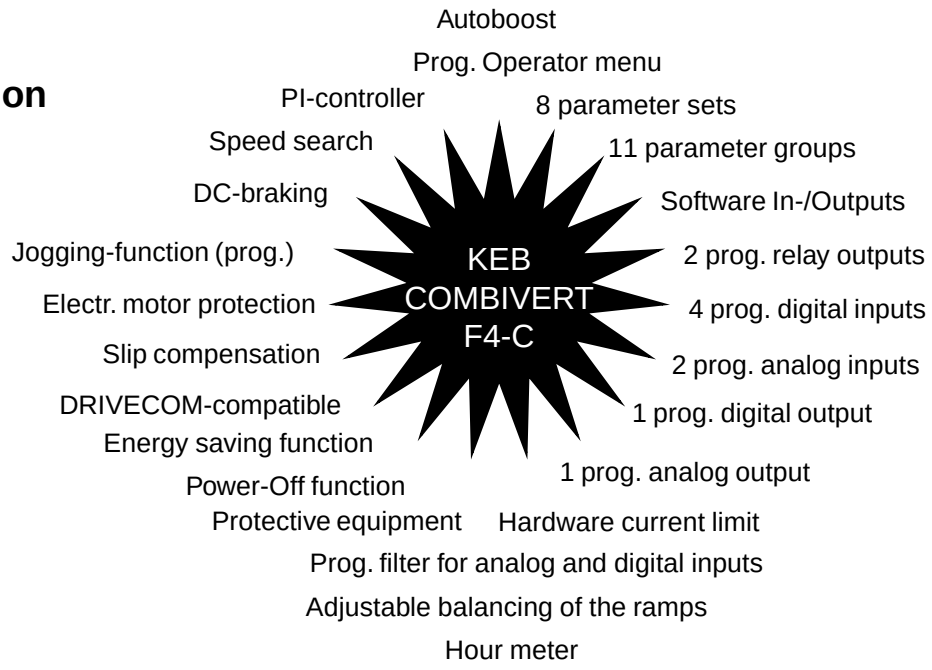

2.1.2 Function Principle

The power circuit of a frequency inverter consists basically of a mains rectifier, the DC-link and an inverter at the output. The mains rectifier consists of an uncontrolled single or three-phase bridge connection, the single-phase design is restricted to small powers. It converts the AC-voltage of the mains into a DC-voltage, which is smoothed by the DC-link capacitor, thus in the ideal case (inverter unloaded) the DC-link is charged with a voltage of $U_{ZK} = \sqrt{2} \cdot U_{N.}$
Since during the charging of the DC-link capacitor very high currents flow for a short time which would lead to the tripping of the input fuses or even to the destruction of the mains rectifier, the charging current must be limited to a permissible level. This is achieved by using an inrush current limiting resistor in series to the capacitor. After the charging of the capacitor is completed the limiting resistor is bridged, for example, by a relay and is therefore only active at the switch-on of the inverter.
As the smoothing of the DC-link voltage requires a large capacity, the capacitor still has a high voltage for some time after the disconnection of the inverter from the mains.
The actual task of the frequency inverter, to produce an output voltage variable in frequency and amplitude for the control of the three-phase AC motor, is taken over by the converter at the output. It makes available a 3-phase output voltage according to the principle of the pulse-width modulation, which generates a sinusoidal current at the three-phase asynchronous motor

Picture 2.1.2 Block diagram of an inverter power circuit

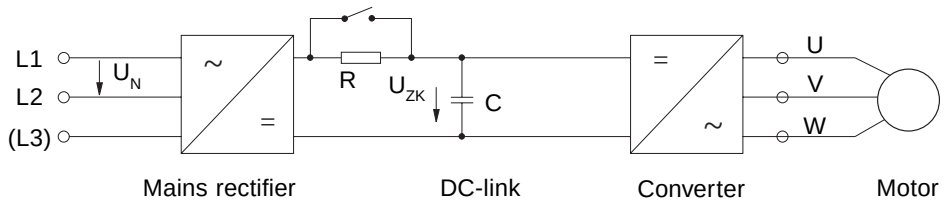

2.1.3 Application as directed

The KEB COMBIVERT is a frequency inverter with DC-voltage link. It works according to the principle of the pulse-width modulation and serves exclusively for the stepless speed control of three-phase AC motors.
The unit has been developed subject to the relevant safety standards and is manufactured with the highest demands on quality. Condition for an unobjectionable operation is the function-conform configuring of the drive and correct transport and storage as well as careful installation and connection.

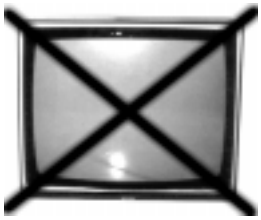

The operation of other electric consumers is prohibited and can lead to the destruction of the units as well as consequential damages as a result from it.

© KEB Antriebstechnik, 1999
All Rights reserved

2.1.4 Type Code

Part Number

15.F4.C1G–3440

Options	0 =	Standard
Clock frequency	1 =	2 kHz
	2 =	4 kHz
	4 =	8 kHz
	6 =	12 kHz
	8 =	16 kHz
Supply voltage	2 =	230 V-Class
	4 =	400 V-Class
Input code	1 =	1-phase
	2 =	DC
	3 =	3-phase
	4 =	Special- / customer version *
	5 =	Special- / customer version *
Housing design	D, E, G, H, L, M, N, P, R, U	
Accessories	0 =	None
	1 =	Braking transistor
	2 =	Filter
	3 =	Filter and braking transistor
Used control	C =	Compact
	S =	Standard
	F =	Field-oriented control
Series	F4	
Housing size	07...29	

*) For customer or special versions the last 4 digits are different from the above type code.

2.1.5 Validity of Specifications

The following technical specifications refer to 2-/4-pole standard motors. In case of different pole numbers the frequency inverter must be dimensioned for the rated motor current. With regard to special or medium frequency motors, please contact KEB.

The power losses always refer to the max. switching frequency. If the switching frequency is reduced, the power loss is reduced as well.

Site altitude max. 2000 m. For altitudes of 1000 m or more above N.N. a power reduction of 1 % per 100m must be taken into account.

2.1.6 Unit Sizes 230V-Class

Inverter Size		**07**		**09**		**10**		**13**		**14**	**15**	**16**
Output nominal power	[kVA]	1,6		2,8		4		8,3		11	17	23
Max. rated motor power	[kW]	0,75		1,5		2,2		5,5		7,5	11	15
Output nominal current	[A]	4		7		10		24		33	48	66
Max. short-time current	[A]	7,2		12,6		18		36,5		49,5	72	99
OC-tripping current	[A]	8,8		15		22		43		59	88	119
Nominal input current	[A]	8	4,4	14	7,7	20	11	26,5		36	53	73
Housing size		**D**	**D**	**D**	**D**	**D**	**D**	**E**	**G**	**G**	**H**	**H**
Rated operating frequency	[kHz]	16		8		16		4	16	16	16	16
Max.operating frequency	[kHz]	16		8		16		4	16	16	16	16
Power loss at nominal operating	[W]	65		70		135		165	220	280	430	550
Max. heat sink temperature T_{OH}	[°C]	85		85		85		73	90	90	90	90
Max. permissible mains fuse (inert)	[A]	20	10	20	10	25	20	35		50	80	80
Line cross section	[mm²]	2,5	1,5	2,5	1,5	4	2,5	6		10	25	25
Min. braking resistor [1)]	[Ω]	56		56		28		39	16	13	5,6	5,6
Typ. braking resistor [1)]	[Ω]	100		100		68		56	22	16	13,6	8,8
Max. braking current	[A]	7		7		14		21	29	29	70	70
Tightening torque for terminals	[Nm]	0,5							1,2			
Mains voltage	[V]	180...260 +/-0 (230V Nominal voltage)										
Phases		1	3	1	3	1	3	3	3	3	3	3
Mains frequency	[Hz]	50 / 60 +/- 2										
Output voltage	[V]	3 x 0...U Mains										
Output frequency	[Hz]	see control board										
Shielded motor line length	[m]	30	30	50	50	100						
Storage temperature	[°C]	-25...70 °C										
Operating temperature	[°C]	-10...45 °C										
Model / protective system		IP20										
Relative humidity		max. 95% without condensation										
Tested in accordance with...		EN 61800-3										
Climatic category		3K3 in accordance with EN 50178										

1) This data is only valid for units with internal brake transistor (see „2.1.4 Type Code“).

© KEB Antriebstechnik, 1999
All Rights reserved

2.1.7 Unit Sizes 400V-Class (07-17)

Inverter Size		07	09	10		12		13			14		15			16		17		
Output nominal power	[kVA]	1,8	2,8	4		6,6		8,3			11		17			23		29		
Max. rated motor power	[kW]	0,8	1,5	2,2		4		5,5			7,5		11			15		18,5		
Output nominal current	[A]	2,6	4,1	5,8		9,5		12			16,5		24			33		42		
Max. short-time current	[A]	4,6	7,4	10,4		17,1		21,6		18	30	25	36			49,5		63		
OC-tripping current	[A]	5,7	9	12,7		20,9		26,4		22	36	30	43,2			59,4		75,6		
Nominal input current	[A]	2,8	4,5	6,4		10,5		13,2			18,1		26,5			36,5		46		
Housing size		**D**	**D**	**D**	**D**	**D**	**E**	**D**	**E**	**G**	**E**	**G**	**E**	**G**	**H**	**G**	**H**	**G**	**H**	**R**
Rated operating frequency	[kHz]	4	4	4	12	4	16	2	16		8	16	4	8	16	8	16	4	8	16
Max.operating frequency	[kHz]	4	4	4	12	4	16	4	16		16	16	12	16	16	16	16	16	16	16
Power loss at nominal operating	[W]	45	60	80	130	115	180	135	240	200	240	260	260	290	360	310	490	360	470	700
Stall current at 8kHz	[A]	-	-	-	6,4	-	9,5	-	12	19	17	19	-	19	25	22	33	-	30	42
Stall current at 16kHz	[A]	-	-	-	-	-	9,5	-	12	12	-	12	-	8,5	15	9,7	20	-	14	30
Max. heat sink temperature T_{OH}	[°C]	85			79	85	73	79	73	90	73	90	73	90		90		90		79
Max. permissible mains fuse (inert) [1]	[A]	10		10		20		20			25		35			50		63		
Line cross section	[mm²]	1,5		1,5		2,5		2,5			4		6			10		16		
Min. braking resistor [2]	[Ω]	160		160		82	50	82	50	39	50	39	39		22	25	22	25	22	9
Typ. braking resistor [2]	[Ω]	390		270		150		100			82		56			39		28		
Max. braking current	[A]	5				10	15	10	15	21	15	21	21		37	30	37	30	37	88
Tightening torque for terminals	[Nm]	0,5								1,2	0,5	1,2	0,5	1,2	2,5	1,2		2,5		
Mains voltage [3]	[V]	305...500 +/-0 (400V Nominal voltage) [1]																		
Phases		3																		
Mains frequency	[Hz]	50 / 60 +/- 2																		
Output voltage	[V]	3 x 0...U Mains																		
Output frequency	[Hz]	see control board																		
Shielded motor line length	[m]	50	50	100		100		100			100		100			100		100		
Storage temperature	[°C]	-25...70 °C																		
Operating temperature	[°C]	-10...45 °C																		
Model / protective system		IP20																		
Relative humidity		max. 95% without condensation																		
Tested in accordance with...		EN 61800-3																		
Climatic category		3K3 in accordance with EN 50178																		

1) From housing size M fuses of Type Ferra Z 6,6 URD xxx must be used.
2) This data is only valid for units with internal brake transistor (see „2.1.4 Type Code“).
3) At mains voltage ≥460V multiply the nominal current with factor 0,86.
4) These units can be used with one or more braking modules. For more informations cantact KEB.

Unit Sizes 400V-Class (18-29)

Inverter Size		18		19		20	21		22		23				24			25		26		27		28	29
Output nominal power	[kVA]	35		42		52	62		80		104				125			145		173		208		256	319
Max. motor rating	[kW]	22		30		37	45		55		75				90			110		132		160		200	250
Output nominal current	[A]	50		60		75	90		115		150				180			210		250		300		370	460
Max. short-time current	[A]	75		90		112,5	135		172,5		225				225			262,5		312,5		375		462,5	575
OC-tripping current	[A]	90		108		135	162		207		270				270			315		375		450		555	690
Nominal input current	[A]	55		66		83	100		127		165				198			231		275		330		410	510
Housing size		**H**	**R**	**H**	**R**	**R**	**R**	**L**	**R**	**L**	**R**	**L**	**M**	**U**	**M**	**U**	**U**	**N**	**U**	**N**	**U**	**P**	**U**	**P**	**P**
Rated operating frequency	[kHz]	8	16	4	8	8	4/8	8	4	8	2	4	8	8	8	4	8	4	4	4	4	2	2	2	1
Max.operating frequency	[kHz]	16	16	16	16	16	16	16	4	16	2	16	8	16	8	4	8	4	4	4	4	2	2	2	1
Power loss at nominal operating	[W]	610	850	540	750	900	1100	1100	1200	1400	1300	1400	1800	1900	2200	200	2400	2300	2300	2700	2800	2900	3100	3500	4200
Stall current at 8kHz	[A]	45	50	-	60	75	90	90	-	115	-	-	140	150	-	-	180	-	-	-	-	-	-	-	-
Stall current at 16kHz	[A]	20	40	-	27	33,7	40,5	-	-	51,7	-	-	-	-	-	-	-	-	-	-	-	-	-	-	-
Max. heat sink temperature T_{OH}	[°C]	90	79	90	90	90																			
Max. permissible mains fuse (inert) [1]	[A]	80		80		100	160		160		200				315			315		400		450		550	700
Line cross section	[mm²]	25		25		35	50		50		95				95			95		120		150		185	2x120
Min. braking resistor [2]	[Ω]	13	9	13	9	9	9	8	9	6	6		[4]	5	[4]	4		[4]	4	[4]	4	[4]	4	[4]	
Typ. braking resistor [2]	[Ω]	22		16		13	11		9		6		[4]	6	[4]	6		[4]	4	[4]	4	[4]	4	[4]	
Max. braking current	[A]	63	88	63	88	88	88	100	88	133	133		[4]	160	[4]	200		[4]	200	[4]	200	[4]	200	[4]	
Tightening torque for terminals	[Nm]	2,5																							
Mains voltage [3]	[V]	305...500 +/-0 (400V Nominal voltage) [1]																							
Phases		3																							
Mains frequency	[Hz]	50 / 60 +/- 2																							
Output voltage	[V]	3 x 0...U Mains																							
Output frequency	[Hz]	see control board																							
Shielded motor line length	[m]	100		100																					
Storage temperature	[°C]	-25...70 °C																							
Operating temperature	[°C]	-10...45 °C																						...40°C	...35°C
Model / protective system		IP20																							
Relative humidity		max. 95% without condensation																							
Tested in accordance with...		EN 61800-3																							
Climatic category		3K3 in accordance with EN 50178																							

1) From housing size M fuses of Type Ferra Z 6,6 URD xxx must be used.
2) This data is only valid for units with internal brake transistor (see „2.1.4 Type Code“).
3) At mains voltage ≥460V multiply the nominal current with factor 0,86.
4) These units can be used with one or more braking modules. For more informations cantact KEB.

© KEB Antriebstechnik, 1999
All Rights reserved

1. Introduction

2. Summary

3. Hardware

4. Operation

5. Parameter

6. Functions

7. Start-up

8. Special Operation

9. Error Assistance

10. Project Planning

11. Networks

12. Applications

13. Annex

3.1 Control Units

3.1.1 Survey 3
3.1.2 Control Card 0A.F4.080-xxxx . 4
3.1.3 Control Card 0D.F4.080-xxxx . 5
3.1.4 Control Card 00.F4.080-xxxx . 5
3.1.5 Control Terminal Strip 6
3.1.6 Wiring of Digital Inputs 7
3.1.7 Wiring of Analog Inputs 7
3.1.8 Wiring of Outputs 8

3. Hardware

3.1 Control Units

3.1.1 Survey

Depending on the functional extent and the housing size 3 variants of F4C-control cards are available.

Part No.: 0A.F4.080-xxxx
Software: V1.4

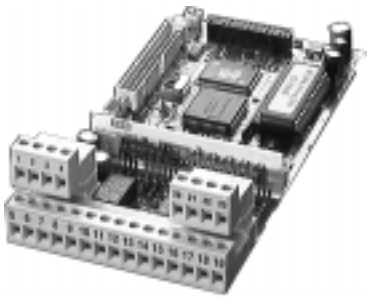

- for housing size D and E
- no speed control possible
- no brake control
- bus connection via operator
- value ranges in part limited

Part No.: 0D.F4.080-xxxx
Software: V2.2

- for housing size D and E
- complete functional extent
- bus connection via operator
- usable only in connection with speed detection card

Part No.: 00.F4.080-xxxx
Software: V2.2

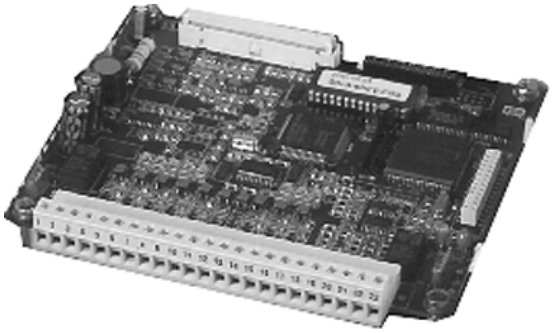

- for housing size G to P
- complete functional extent
- bus connection via operator or interface card

3.1.2 Control Cards 0A.F4.080-xxxx

This control card is used in D and E units when no speed detection is required. The following changes in the parameter and function description have to be taken into account:

Missing parameters:

- ru.46 Ramp output frequency
- ru.47 Actual frequency of speed detection
- oP.30 Motor-poti / prescaler
- oP.31 Motor-poti / target
- oP.32 Max. output freq. clockwise rotation
- oP.33 Max. output freq. counter-clockwise rotation
- Pn.51 Brake control / mode
- Pn.52 Brake control / starting time 1
- Pn.53 Brake control / starting time 2
- Pn.54 Brake control / starting frequency
- Pn.55 Brake control / stopping time 1
- Pn.56 Brake control / stopping time 2
- Pn.57 Brake control / stopping frequency
- Pn.58 Brake control / load level
- LE.69 Hysteresis analog inputs
- di.21 Reset ST Mode
- cn.3 Source actual speed
- dr.22 Breakdown torque factor
- dr.24 Selection speed detection
- dr.25 Line number incremental encoder 1
- dr.29 Track change channel 1
- dr.30 Line numer incremental encoder 2
- dr.34 Track change channel 2
- dr.35 Gearbox factor channel 1
- dr.36 Gearbox factor channel 2
- dr.37 Filter incremental encoder 1
- dr.38 Filter incremental encoder 2
- dr.43 Rotation direction initiator
- An.26 Interference filter analog optional input
- An.27 Zero point hysteresis analog optional input

Parameters with limited value range:

- oP.0 Setpoint value source value 21...26 missing
- cn.0 Controller selection Bit 3...7 missing
- Pn.33 Power-Off mode
- Pn.50 Speed search mode
- An.14 Function analog output
- uF.8 DC-link compensation min. 10V
- do.1-4 Switching condition 1 to 4 value „36“ and „37“ not available
- di.20 Value „2“ not available
- In.15, In.16, In,19, In.21, In23

Specifications

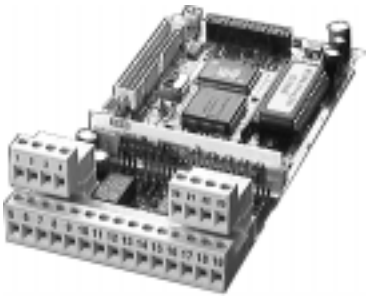

- 1 programmable transistor output 14...30VDC / max. 20mA
- 2 programmable relay outputs 30VDC / 1A
- 4 programmable digital inputs 12...30VDC ±0% / R_i=2kΩ
- 4 non-adjustable digital inputs 12...30VDC ±0% / R_i=2kΩ
- 1 analog output 0...10VDC / max. 5mA at R_B>56kΩ const.
- 1 multi-function analog input 0...10V, 0...20mA or 4...20mA
- 1 differential voltage input ±10VDC
- 1 voltage ouput +15VDC / max. 100 mA for the supply of the digital inputs and outputs
- 1 voltage output +10VDC / max. 4mA for the supply of the setpoint value poti

© KEB Antriebsteclnik, 1997
All Rights reserved

3.1.3 Control Card 0D.F4.080-xxxx

This control card is used in D and E units when a speed detection is required. According to these instructions the functional extent of the control card is not limited.

Specifications

- 1 programmable transistor output 14...30VDC / max. 20mA
- 2 programmable relay outputs 30VDC / 1A
- 4 programmable digital inputs 12...30VDC ±0% / R_i=2kΩ
- 4 non-adjustable digital inputs 12...30VDC ±0% / R_i=2kΩ
- 1 analog output 0...10VDC / max. 5mA at R_B>56kΩ const.
- 1 multi-function analog output 0...10V, 0...20mA or 4...20mA
- 1 differential voltage input ±10VDC
- 1 voltage output +15VDC / max. 100 mA for the supply of the digital inputs and outputs
- 1 voltage output +10VDC / max. 4mA for the supply of the setpoint value poti
- separate supply

To operate the control card one of the speed detection cards described in Chapter 6.10 is necessary.

3.1.4 Control Card 00.F4.080-xxxx

This control card is used in units with housing size G and upwards. According to these instructions the functional extent of the control card is not limited. For INTER-BUS or CAN-BUS applications an interface card can be connected to the control in case the operator is used for operation or control.

Specifications

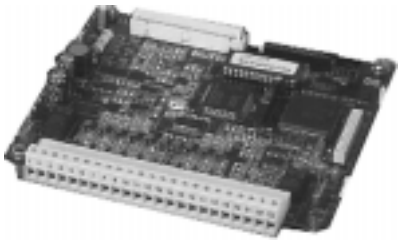

- 1 programmable transistor output 14...30VDC / max. 20mA
- 2 programmable relay outputs 30VDC / 1A
- 4 programmable digital inputs 12...30VDC ±0% / R_i=2kΩ
- 4 non-adjustable digital inputs 12...30VDC ±0% / R_i=2kΩ
- 1 analog output 0...10VDC / max. 5mA at R_B>56kΩ const.
- 1 multi-function analog input 0...10V, 0...20mA or 4...20mA
- 1 differential voltage input ±10VDC
- 1 voltage output +15VDC / max. 100mA for the supply of the digital inputs and outputs
- 1 voltage output +10VDC / max. 4mA for the supply of the setpoint value poti
- separate supply

© KEB Antriebstechnik, 1997
All Rights reserved

3.1.5 Control Terminal Strip

for housing size D and E

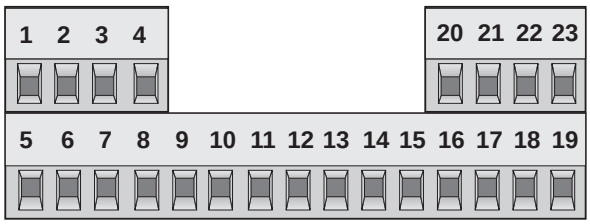

from housing size G upwards

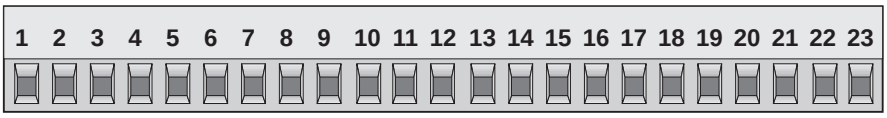

X1	Name	Function	Description / Specification
1 2 3	RLA RLB RLC	programmable output relay (OUT2) see Chapter 6.3.13	30VDC / 1A
4	I1	programmable input 1 (fixed frequency 1)*1	interference immunity 2 kV logic 1 at ±12....30 VDC input resistance: ca. 2 kΩ Logic: PNP / NPN (prog. with di.1) *1 Factory setting, the functions are changeable with di.3...di.6
5	I2	programmable input 2 (fixed frequency 2)*1	
6	I3	programmable input 3 (DC-brake)*1	
7	I4	programmable input 4 (energy saving function)*1	
8 9	REF+ REF-	analog setpoint input see Chapter 6.2.	voltage differential input ±10V Ri: 40kΩ (56kΩ); Resolution: ±11Bit
10 11	F R	rotation selection forward/reverse (or Run/Stop)	specifications see I1...I4 function is changeable with di.20
12	OUT1	programmable transistor output (OUT1) see Chapter 6.3.13	14...30V max. 20mA
13	0V	earth for Uext and digital in-/outputs	**Voltage:** depending on power circuit and load 16...30VDC load rating: max. 100mA **Voltage output**: supply voltage provided by the inverter for digital in- and outputs **Voltage input:** external supply voltage for digital in-/outputs (only necessary if the voltage provided by the inverter is too low for a primary control) and for the supply of the control card at switched off power circuit (external supply see control card)
14	Uext	external voltage in-/output	
15	AOUT	progr. analog output (s. Chap. 6.2.10)	Uout: 0...10 VDC; Imax: 5 mA; Ri < 100 Ω; Resolution: 9 Bit
16	CRF	reference voltage for analog input	Voltage output +10 VDC ±3%; max 4 mA
17	REF	progr. analog input (s. An.6 Chap. 6.2)	0...10V Ri: 56 kΩ (0...20mA or 4...20mA Ri: 250 Ω)
18	COM	analog earth	earth for analog in-/outputs
19	ST	control release (reset at breaking contact progr. with di.21)	specifications see I1...I4
20	RST	reset	specifications see I1...I4
21 22 23	FLA FLB FLC	programmable output relay (Out3) see Chapter 6.3.13	30VDC / 1A

! *The terminals for analog and digital signals are isolated!*
To avoid malfunctions caused by injection of interference voltage you should absolutely adhere to following instructions: Use shielded / twisted cables; apply the shield single-sided to the inverter on earth potential; lay control and power cables separately (distance approx. 10…20 cm); crossings, if they cannot be avoided, are to be laid in right angles!

© KEB Antriebsteclnik, 1997
All Rights reserved

3.1.6 Wiring of Digital Inputs

To avoid undefined conditions at external supply, the supply should always be switched on first and then the inverter. In the delivered state the inputs are controlled with a positive voltage (PNP). This can be effected through an external supply as well as the internal supply:

PNP-control through internal voltage supply

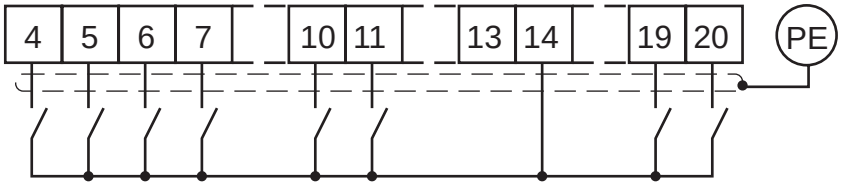

PNP-control with external voltage supply

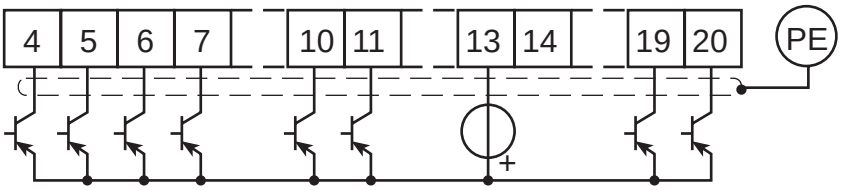

By changing the control logic (parameter di.1="1") the inputs can be switched against 0V (NPN):

NPN-control through internal voltage supply

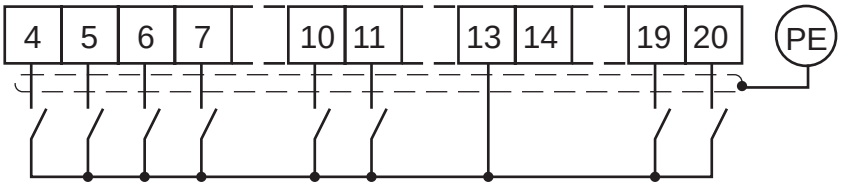

NPN-control with external voltage supply

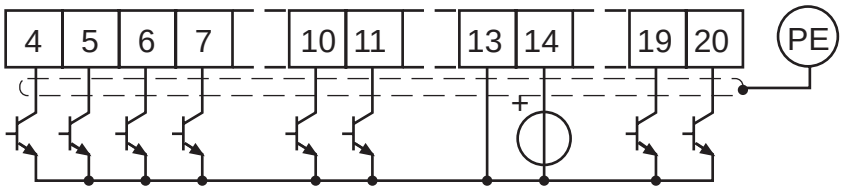

3.1.7 Wiring of Analog Inputs

with internal reference voltage

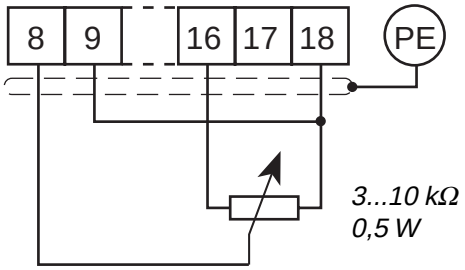

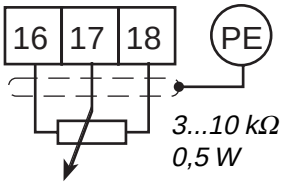

through external setpoint source

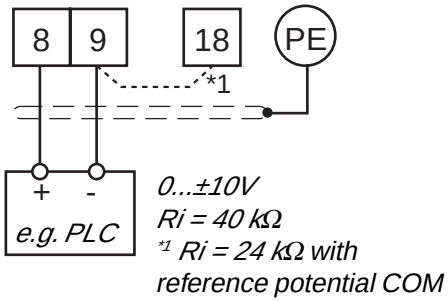

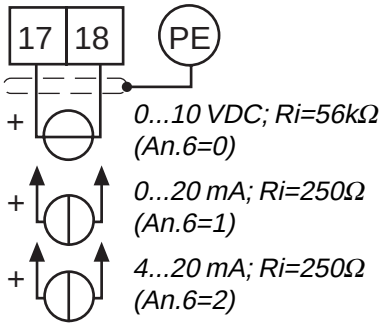

Analog inputs that are not used are to be connected to ground reference!

3.1.8 Wiring of Outputs

! At transistor output X1.12 a current of 50mA can be taken, so that 50mA remain for the supply of the digital inputs!
At inductive load on the relay outputs or transistor output a protective wiring must be provided (freewheeling diode).

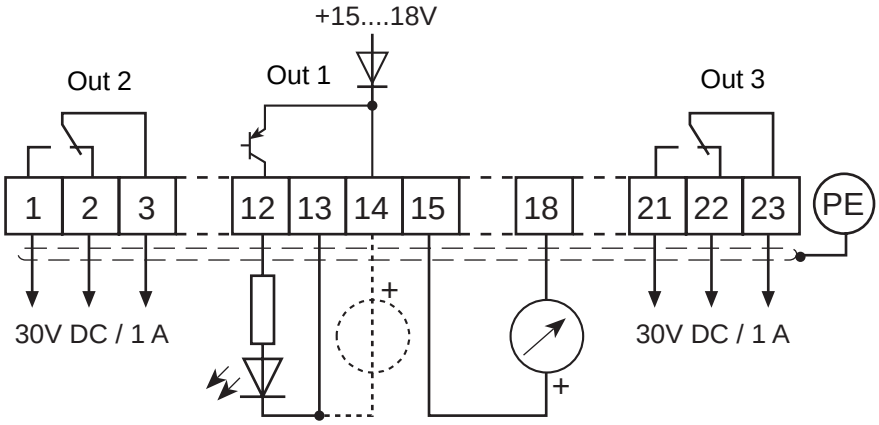

1. Introduction

2. Summary

3. Hardware

4. Operation

5. Parameter

6. Functions

7. Start-up

8. Special Operation

9. Error Assistance

10. Project Planning

11. Networks

12. Applications

13. Annex

4.1 Fundamentals

4.2 Password Structure

4.3 CP-Parameter

4.4 Drive-Mode

4.1.1 Parameters, Parameter Groups, Parameter Sets 3
4.1.2 Selection of a Parameter 4
4.1.3 Adjustment of Parameter Values 4
4.1.4 ENTER-Parameter 4
4.1.5 Non-programmable Parameters 5
4.1.6 Resetting of Error Messages .. 5
4.1.7 Resetting of Peak Values 5
4.1.8 Acknowledgement of Status Signals 5

4. Operation

4.1 Fundamentals

The following chapter describes the fundumentals of the software structure as well as the operation of the unit.

The control board F4-C incorporates 3 operating modes:

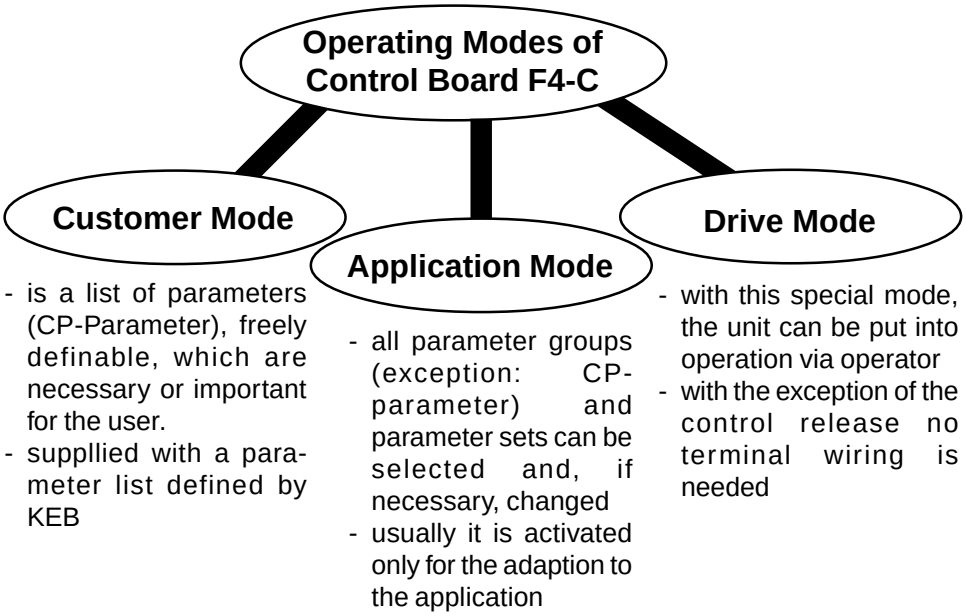

4.1.1 Parameters, Parameter Groups, Parameter Sets

What are parameters, parameter groups and parameter sets?

Parameters are values changeable by the operator in a program, which have an influence on the program flow. A parameter consists of

Parameter designation and **Parameter value**

Each parameter is clearly specified!

The **parameter value** shows the actual setting.

The **parameter number** specifies the parameters within a group.

To maintain a cleary-to-survey operation inspite of the great number of parameters, we have combined function-related parameters into **parameter groups** (e.g. all motor-related parameters are combined in the Drive(dr)-group).

8 **parameter sets** (0...7) exist to adjust several values for one parameter. If the active values shall be displayed for a running unit the digit is set to „A“. The digit is not-applicable for non-programmable parameters.

Example: A conveyor belt shall be used with 3 different speeds. A parameter set is programmed for each „speed“ ... acceleration, deceleration etc. can be adjusted individually.

4.1.2 Selection of a Parameter

The blinking point indicates the changeable area. By pressing the ENTER-key the blinking point is shifted.

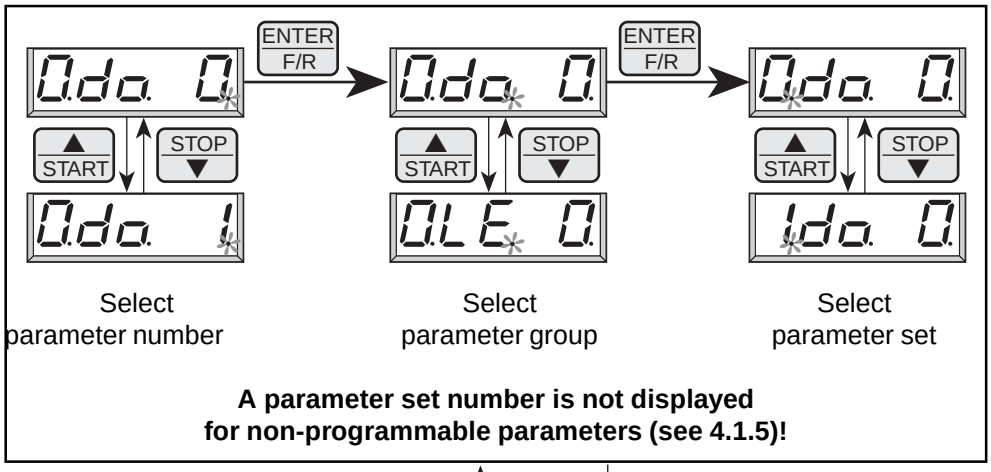

Changes between parameter value FUNCT SPEED **and parameter designation**

4.1.3 Adjustment of Parameter Values

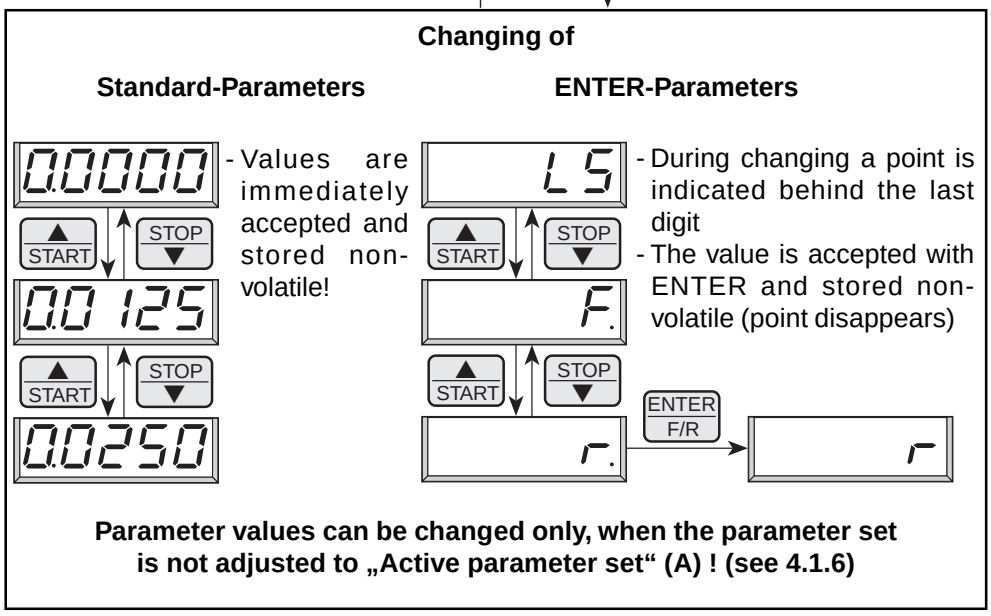

4.1.4 ENTER-Parameter

For some parameters it is not sensible that the selected values become active immediately. For that reason they are called ENTER-parameters, they do not become active until the ENTER-key is pressed.

Example: At digital setting of rotation direction the rotation reverse (r) shall be selected from standstill (LS). As shown above, the actuation must be done via rotation forward (F). However, the drive must not start yet, first the rotation direction reverse has to be selected and confirmed with ENTER (point disappears).

© KEB Antriebstechnik, 1997 All Rights reserved

4.1.5 Non-programmable Parameters

Certain parameters are not programmable, as their value must be the same in all sets (e.g. bus address or baud rate). For an easy identification of these parameters the parameter set number is missing in the parameter identification. **For all non-programmable parameters the same value is valid independent of the selected parameter set!**

4.1.6 Resetting of Error Messages

If a malfunction occurs during operation, the actual display is overwritten by a blinking error message. The error message can be cancelled by pressing the ENTER-key, so that the original value is again shown in the display.
ATTENTION! The resetting of the error message with ENTER is no error reset, i.e. the error status in the inverter is not reset. Thus it is possible to correct adjustments before the error reset. An error reset is only possible through the reset terminal or control release.

4.1.7 Resetting of Peak Values

To permit conclusions on the operational performance of the drive, parameters are provided that indicate the peak values. Peak value means that the highest measured value is stored for the ON-time of the inverter (slave pointer principle). The peak value is cancelled by ▲ or ▼ and the actual measured value is shown in the display.

4.1.8 Acknowledgement of Status Signals

To monitor the correct execution of an action some parameters send a status signal. For example, after copying a set the display shows „PASS“ to indicate that the action was carried out without error. These status signals must be acknowledged with ENTER.

1. Introduction

2. Summary

3. Hardware

4. Operation

4.1 Fundamentals

4.2 Password Structure

4.2.1 Password Levels 3
4.2.2 Passwords 4
4.2.3 Changing of Password Level .. 4

4.3 CP-Parameter

4.4 Drive-Mode

5. Parameter

6. Functions

7. Start-up

8. Special Operation

9. Error Assistance

10. Project Planning

11. Networks

12. Applications

13. Annex

© KEB Antriebstechnik, 1997
All Rights reserved

4.2 Password Structure

The KEB COMBIVERT is provided with extensive password protection. The different passwords are used to

- change the operating mode
- set a write protection
- activate the Service-Mode
- switch to the Drive-Mode

Depending on the actual operating mode the password can be entered in following parameters

when the CP-Mode is active

when the applicatioan mode is active

4.2.1 Password Levels

The parameter value of the above parameters shows the actual password level. Following indications are possible:

CP - read only

Only the Customer-parameter group is visible, exept for CP.0 all parameters are in the read-only status (see Chapter 4.3).

CP - on

Only the Customer-parameter group is visible. All parameters can be changed.

CP - Service

Like CP-on, but the parameter identification is indicated according to the original parameter (see Chapter 4.3).

Application

All application parameters are visible and can be changed. The CP-parameters are not visible.

Drive-Mode

The Drive-Mode is a special operating mode, here the unit can be put into operation via the operator (see Chapter 4.4).

© KEB Antriebstechnik, 1997
All Rights reserved

4.2.2 Passwords

By selecting one of the following passwords you can switch to the respective password level:

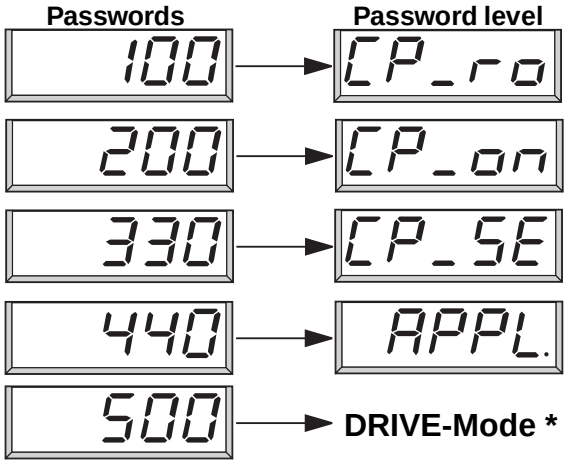

To finish the Drive-Mode press ENTER + FUNCT key for approx. 3 sec. (see Chapter 4.4).

4.2.3 Changing of Password Level

Example 1:
Switching from CP-Mode to the application mode

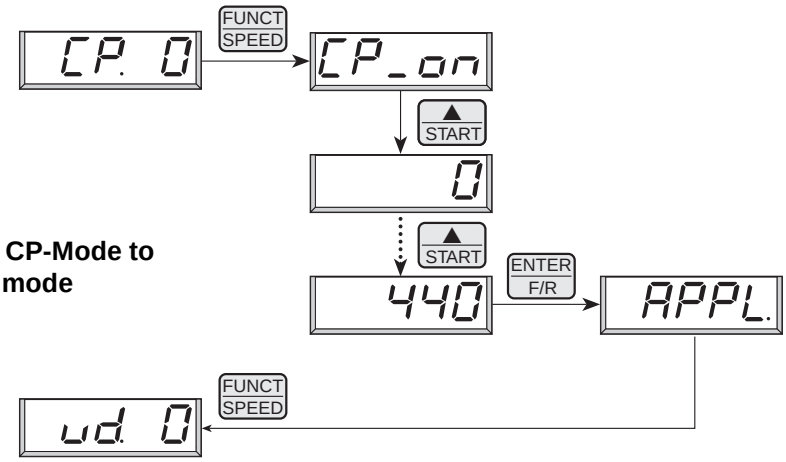

With the exception of the service password all entered password levels are generally stored non-volatile!

Example 1:
Switching from application mode to the CP-read-only mode

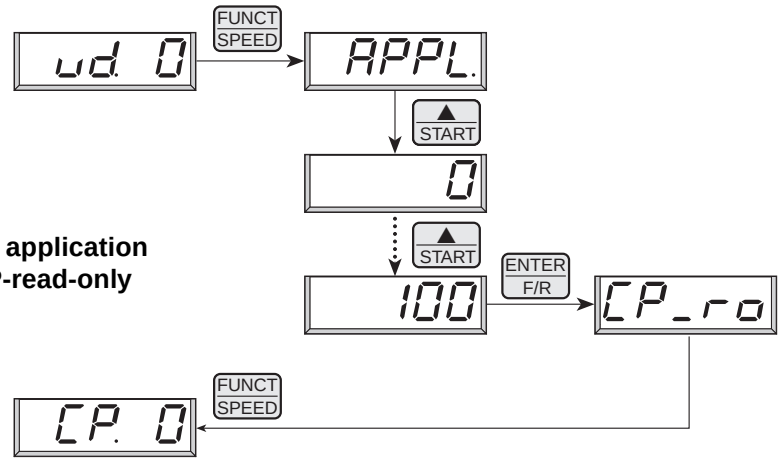

1. Introduction

2. Summary

3. Hardware

4. Operation

4.1 Fundamentals

4.2 Password Structure

4.3 CP-Parameter

4.3.1 Operation in CP-Mode 3
4.3.2 Factory Setting 3
4.3.3 Description of CP-Parameter 4
4.3.4 Status Display 4
4.3.5 Basic Setting of the Drive 5
4.3.6 Special Settings 7

4.4 Drive-Mode

5. Parameter

6. Functions

7. Start-up

8. Special Operation

9. Error Assistance

10. Project Planning

11. Networks

12. Applications

13. Annex

4.3 CP-Parameter

The Customer-Parameters (CP) are a special group of parameter. With the exception of CP.0 (Password input), they can be defined by the user. The following Parameters are preset at delivery.

Advantages from it:
- operator-friendly for the customer
- critical parameters are protected against maloperation
- low documentation cost for the machine builder

4.3.1 Operation in CP-Mode

Compared to the Application-Mode the operation in the CP-Mode is easier because parameter set selection and parameter group selection are unnecessary.

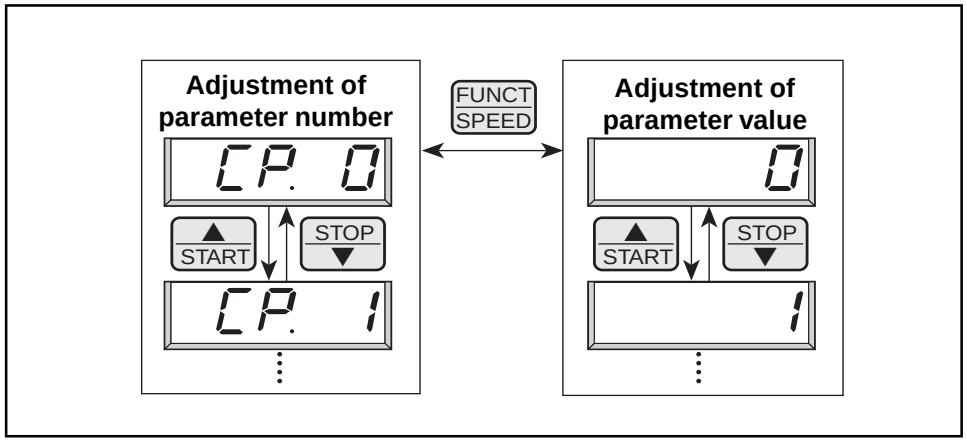

4.3.2 Factory Setting

The following list shows the CP-parameter group predefined by us. The definition of the CP-parameters is done in the User-Definition-Parameters (ud). How you can define your own parameters is described in Chapter 5.

Display	Parameter	Setting Range	Resolution	Factory Setting	Source
CP. 0	Password input	0...9999	1	-	ud. 0
CP. 1	Actual frequency display	-	0,1 Hz	-	ru. 3
CP. 2	Status display	-	-	-	ru. 0
CP. 3	Actual load	-	1 %	-	ru. 7
CP. 4	Peak load	-	1 %	-	ru. 8
CP. 5	Rated frequency	0...409,58 Hz	0,0125 Hz	50,0 Hz	0.uF. 0.
CP. 6	Boost	0...25,5 %	0,1 %	2 %	0.uF. 1.
CP. 7	Acceleration time	0,01...300 s	0,01 s	10 s	0.oP.11.
CP. 8	Deceleration time	0,01...300 s	0,01 s	10 s	0.oP.12.
CP. 9	Minimum frequency	0...409,58 Hz	0,0125 Hz	0 Hz	0.oP. 4
CP.10	Maximum frequency	0...409,58 Hz	0,0125 Hz	70 Hz	0.oP. 5.
CP.11	Fixed frequency 1	0...409,58 Hz	0,0125 Hz	5 Hz	0.oP.22.
CP.12	Fixed frequency 2	0...409,58 Hz	0,0125 Hz	50 Hz	0.oP.23.
CP.13	Fixed frequency 3	0...409,58 Hz	0,0125 Hz	70 Hz	0.oP.24.
CP.14	max. ramp current	10...200 %	1 %	140%	0.Pn. 5.
CP.15	max. constant current	10...200 %	1 %	200%	0.Pn.13.
CP.16	Speed search	0...15	1	8	0.Pn. 7.
CP.17	Voltage stabilization	150...649 V,oFF	1 V	off	0.uF. 8.
CP.18	Slip compensation	-2,50...2,50	0,01	0=off	0.cn. 1.
CP.19	Autoboost	-2,50...2,50	0,01	0=off	0.cn. 2.
CP.20	DC-braking	0...9	1	7	0.Pn. 8.
CP.21	DC-braking time	0...100 s	0,01 s	10 s	0.Pn.11.
CP.22	Relay output	0...25	1	2	0.do.2.
CP.23	Frequency level	0...409,58 Hz	0,0125 Hz	4 Hz	0.LE. 2.
CP.24	Setpoint signal	0...2	1	0	An. 6.

4.3.3 Description of CP-Parameter

Preadjusted CP-parameters are described in the following section.

Password input

CP. 0

On delivery all CP-parameters are without password protection, i.e. all changeable parameters can be readjusted. After the parameterization the unit can be locked against unauthorized access. The adjusted mode is stored.

Locking of CP-Parameter

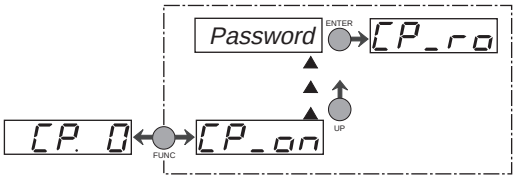

Enabling of CP-Parameter

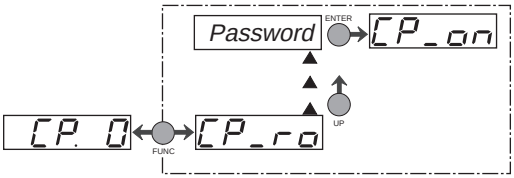

4.3.4 Status Display

The following four parameters serve for the control of the frequency inverter during operation.

Actual frequency

CP. 1

Display of the actual output frequency in Hz. The direction of rotation of the inverter is indicated by the sign. Examples:

18.3 Output frequency 18,3 Hz, direction of rotation forward

- 18.3 Output frequency 18,3 Hz, direction of rotation reverse

Status display

CP. 2

The status display shows the actual operating status of the inverter. Below possible displays and their significance:

noP "no Operation"; control release terminal X1.19 (C-Version), or terminal X1.14 (S-Version) not bridged, modulation disabled, output voltage = 0 V, drive is without control.

LS "Low Speed"; no direction of rotation (terminals X1.10 or X1.11) is set, modulation disabled, output voltage = 0 V, drive is without control.

FAcc "Forward Acceleration"; drive accelerates with rotation direction forward

FdEc "Forward Deceleration"; drive decelerates with rotation direction reverse

rAcc "Reverse Acceleration"; drive accelerates with rotation direction reverse

rdEc "Reverse Deceleration"; drive decelerates with rotation direction reverse

Fcon "Forward Constant"; drive runs with constant speed and rotation direction forward

rcon "Reverse Constant"; drive runs with constant speed and rotation direction reverse

Further status messages are described at the parameters where they come from.

© KEB Antriebstechnik, 1997 All Rights reserved

Actual load

CP. 3

Display of actual inverter load in percent. 100% load correspond to the rated inverter current. Only positive values are displayed, i.e. no difference is made between motoric and regenerative operation.

Peak load

CP. 4

This indication permits the recording of short-time load peaks, by storing the highest value that occurred. The display value is in percent (100% = rated inverter current).

The peak value can be reset with ▲ or ▼ at running unit, or by switching off the unit from mains.

4.3.5 Basic Setting of the Drive

The following parameters determine fundamental operating data. They should be checked in any case and, if necessary, adapted to the application.

Rated frequency

CP. 5

At the frequency adjusted here the inverter reaches its maximum output voltage. The input of the rated motor frequency is typical in this case. Note: Motors may overheat with a wrongly adjusted rated frequency!

Setting range:	0...409,58 Hz
Resolution:	0,0125 Hz
Factory setting:	50,0 Hz
Customer setting:	_____ Hz

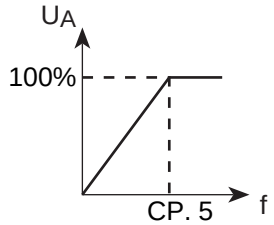

Boost

CP. 6

In the lower speed range a major part of the motor voltage drops across the stator resitance. To maintain a nearly constant breakdown torque of the motor over the entire speed range, the voltage drop can be compensated by the boost.

Setting range:	0...25,5 %
Resolution:	0,1 %
Factory setting:	2,0 %
Customer setting:	_____ %

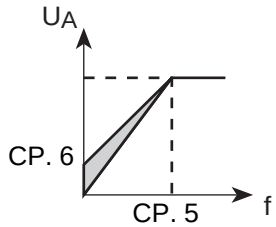

Setting:
- Determine load during idling at rated frequency
- Preselect approx. 10Hz and adjust the boost, so that about the same load as with rated frequency is reached.

If a motor is continously driven at low speed with overvoltage, it can lead to overheating of the motor.

Acceleration time

CP. 7

The parameter determines the time required to accelerate from 0 to 100 Hz.The real acceleration time is proportional to the frequency change.

$$\frac{\text{delta f}}{100\ \text{Hz}} = \frac{\text{real acceleration time}}{\text{CP.7}}$$

Setting range:	0,01...300 s
Resolution:	0,01 s
Factory setting:	10 s
Customer setting:	_____ s

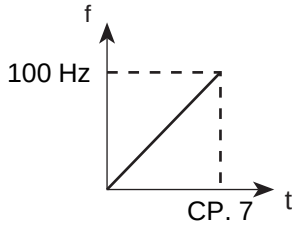

Example: CP. 7 = 10 s ; the drive shall accelerate from 10 Hz to 60 Hz
delta f = 60 Hz - 10 Hz = 50 Hz

real acceleration time = (50 Hz / 100 Hz) x 10s = 5 s

Deceleration time

CP. 8

The parameter defines the time necessary to decelerate from 100 to o Hz. The real deceleration time is proportional to the frequency change.

$$\frac{\text{delta f}}{100\ \text{Hz}} = \frac{\text{real deceleration time}}{\text{CP.8}}$$

Setting range:	0,01...300 s
Resolution:	0,01 s
Factory setting:	10 s
Customer setting:	_____ s

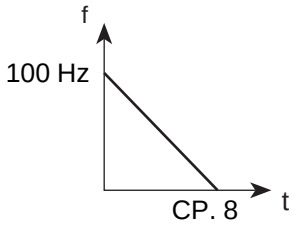

Example: CP. 8 = 10 s ; the drive shall decelerate from 60 Hz down to 10 Hz
delta f = 60 Hz - 10 Hz = 50 Hz

real deceleration time = (50 Hz / 100 Hz) x 10s = 5 s

Minimum frequency

CP. 9

Frequency to which the inverter runs without adjustment of an analog setpoint value. Internal limitation of the fixed frequencies CP.11...CP.13.

Setting range:	0,0...409,58 Hz
Resolution:	0,0125 Hz
Factory setting:	0,0 Hz
Customer setting:	_____ Hz

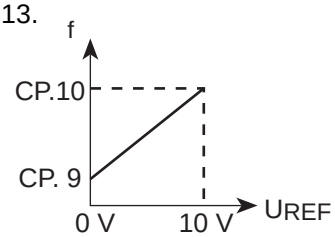

Maximum frequency

CP. 10

Frequency to which the inverter runs at maximum analog setpoint value. Internal limitation of the fixed frequencies CP.11...CP.13.

Setting range:	0,0...409,58 Hz
Resolution:	0,0125 Hz
Factory setting:	70 Hz
Customer setting:	_____ Hz

Fixed frequency 1...3

Terminal X1.4

CP. 11

Terminal X1.5

CP. 12

Terminals X1.4+X1.5

CP. 13

Three fixed frequencies can be adjusted. The selection of the fixed frequencies is done via terminals X1.4 and X1.5.

Setting range:	0,0...409,58 Hz
Resolution:	0,0125 Hz
Factory setting:	5/50/70 Hz
Customer setting 1:	_____ Hz
Customer setting 2:	_____ Hz
Customer setting 3:	_____ Hz

If an adjustment is outside the limits defined with CP.9 and CP.10, then the frequencies are limited internally.

© KEB Antriebstechnik, 1997
All Rights reserved

4.3.6 Special Settings

The following parameters serve for the optimization of the drive and the adaption to the application. These settings can be ignored at the initial start-up.

Max. ramp current

CP.14

This function protects the frequency inverter against switch-off due to overcurrent during the acceleration phase. On attaining the adjusted value the ramp is stopped until the current drops again. At active function the display shows „LAS“ (CP.2).

Setting range:	10...200 %, 200% = off	Housing size D
	10...200 %, >150% = off	Housing size E upwards
Resolution:	1 %	
Factory setting:	140 %	
Customer setting:	_____ %	

Max. constant current

CP.15

This function protects the inverter against switch-off due to overcurrent at constant output frequency. On exceeding the value adjusted here, the output frequency is reduced until it falls below the value. At active function the display shows „SLL“ (CP.2).

Setting range:	10...200 %, 200%=oFF	Housing size D
	10...200 %, >150% = oFF	Housing size E upwards
Resolution:	1 %	
Factory setting:	200%	
Customer setting:	_____ %	

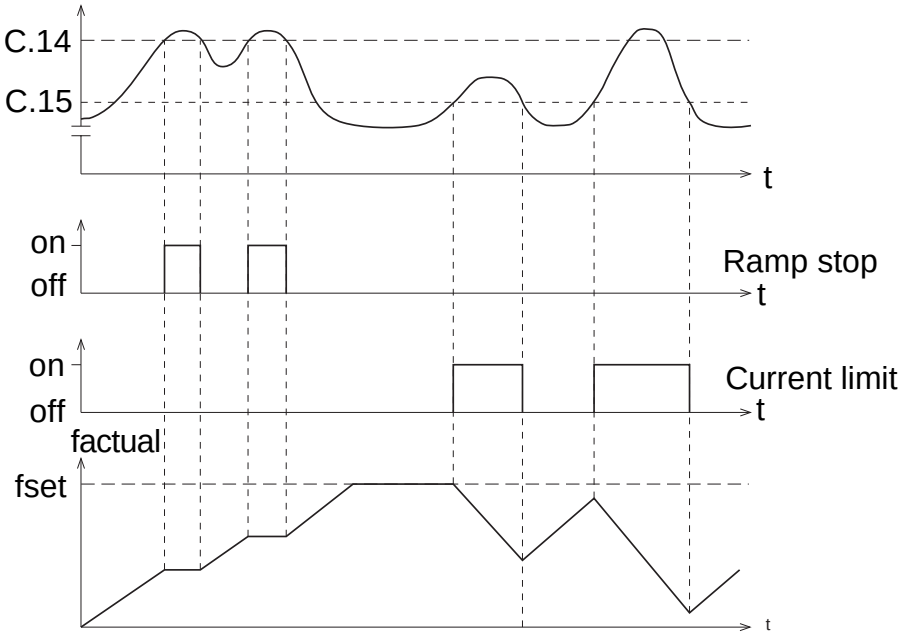

Speed search

CP.16

When connecting the frequency inverter to a coasting motor, an error may be triggered as a result of the different rotary field frequencies. At activated speed search the inverter searches for the actual motor speed, adapts the output frequency and accelerates with the adjusted ramp to the preset setpoint value. During the search phase the display indicates „SSF“ (CP.2). The parameter defines the condition under which the function is effective. In case of several conditions the sum of the values must be entered.
Example: C.16 = 12 means after reset **and** after Auto-Reset UP

Setting range:	0...15
Resolution:	1
Factory setting:	8
Customer setting:	_____

Value	Condition
0	function off
1	at control release
2	at switch on
4	after reset
8	after Auto-Reset UP

Voltage stabilization

CP.17

With this parameter a controlled output voltage in reference to the rated frequency can be adjusted. Thus voltage fluctuations at the input as well as in the DC-link circuit have little effect on the output voltage (U/f-characteristic). Among other things the function permits an adaption of the output voltage to special motors. In the example below the output voltage is stabilized to 230 V (0% boost).

Setting range:	150...649 V, oFF
Resolution:	1 V
Factory setting:	oFF
Customer setting:	_____ V

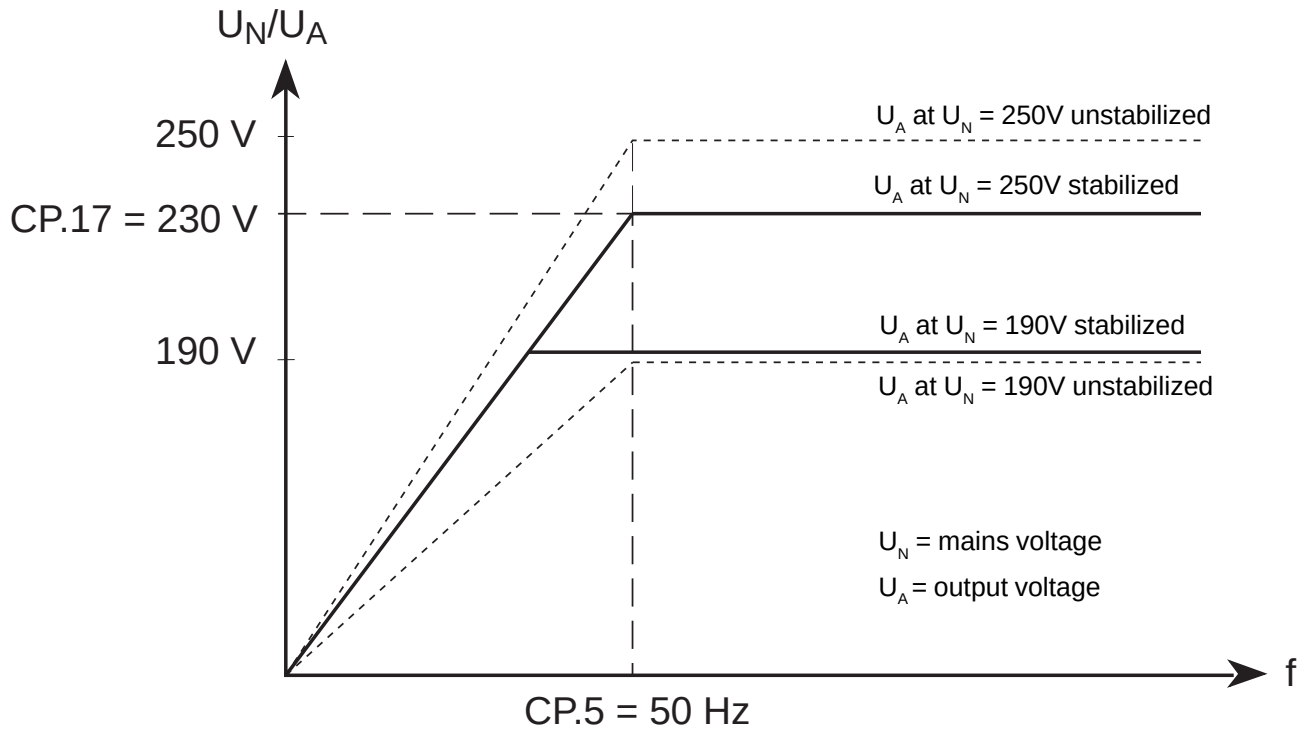

© KEB Antriebstechnik, 1997
All Rights reserved

Slip compensation

CP.18

Slip compensation compensates the speed changes caused by load changes. To activate the function, adjust a value of approx. 1.00 and optimize it according to the examples below.

Setting range:	-2,50...2,50
Resolution:	0,01
Factory setting:	0,00 (off)
Customer setting:	_____

Autoboost

CP.19

In case of high load torques Autoboost causes an automatic I*R-compensation by raising the output voltage. The magnetizing current remains nearly constant. To activate the function, adjust a value of approx. 1.00 and optimize it according to the example. Check, whether the motor voltage is taken back when the load on the drive is reduced. If not, reduce the value of CP.19.

Setting range:	-2,50...2,50
Resolution:	0,01
Factory setting:	0,00 (off)
Customer setting:	_____

Slip compensation and Autoboost work on the basis of preadjusted motor data. When employing a special motor or in case of overdimensioning by more than one size both functions should be deactivated.

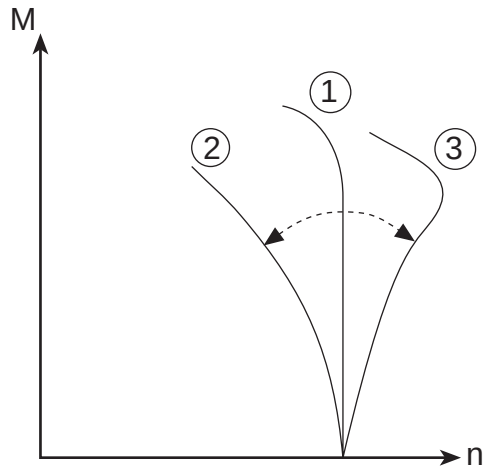

1) good - speed remains stable at rising torque
2) bad - speed decreases with rising torque
3) bad - speed is raised too much under load

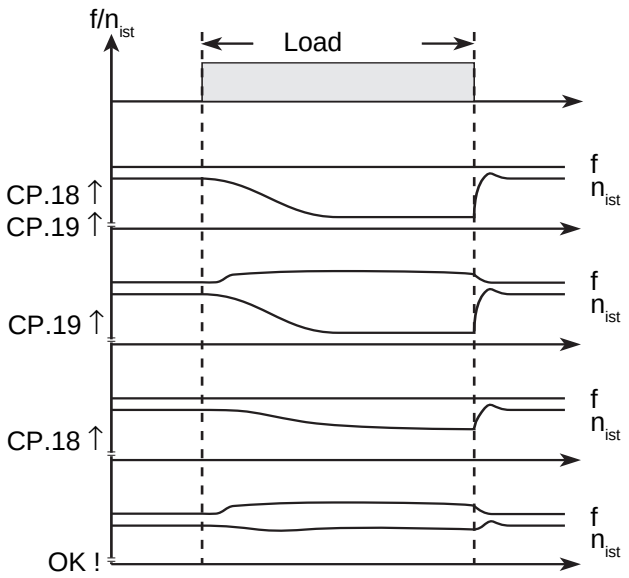

DC-braking

CP.20

At DC-braking the motor is not decelerated by the ramp. The fast stopping is done by a dc-voltage that is given onto the motor winding. This parameter defines how DC-braking is triggered.

Value	Activation
0	DC-braking switched off
1	DC-braking at taking away direction of rotation and attaining 0 Hz. Braking time depends on CP.21 or until the next rotation setting.
2	DC-braking as soon as rotation setting is missing. Braking time depends on the actual frequency.
3	DC-braking as soon as the direction of rotation changes. Braking time depends on the actual frequency.
4	DC-braking at taking away direction of rotation and when actual frequency falls below 4 Hz.
5	DC-braking if actual frequency falls below 4 Hz.
6	DC-braking as soon as setpoint value falls below 4 Hz.
7	DC-braking, if input I3 (terminal X1.6) is switched. Braking time depends on the actual frequency.
8	DC-braking for as long as input I3 (terminal X1.6) is activated.
9	DC-braking after switching on the modulation. Braking time depends on CP.21.

Factory setting:	7
Remarks:	Enter-Parameter
Customer setting:	_____

DC-braking time

CP.21

The braking time is evaluated in dependence on CP.20:

- entered time = braking time
- entered time refers to 100 Hz and is reduced/increased in proportion to the actual frequency

Setting range:	0,00...100 s
Resolution:	0,05 s
Factory setting:	10 s
Customer setting:	_____

Calculation of braking time:

$$t_{Bist} = \frac{CP.21 \ * \ f_{ist}}{100\ Hz}$$

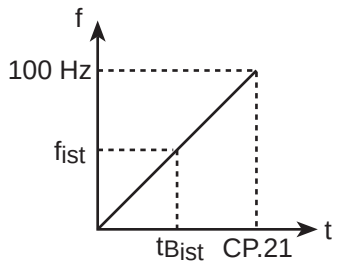

Relay output

CP.22

The relay output (terminal X1.1…X1.3) is factory adjusted as fault relay. With this parameter the function of the output can be adjusted to any function listed in the following table.

Value	Function
0	no function (generally off)
1	generally on
2	fault relay
3	fault relay (not in case of undervoltage error)
4	overload warning
5	overtemperature warning inverter
6	overtemperature motor OH-terminals (switch off after 10s)
7	only for application mode
8	max. constant current (Stall, CP.15) exceeded
9	max. ramp current (LA-/LD-Stop, CP.14) exceeded
10	DC-braking active
11	only for application mode
12	load (CP.3) > 100%
13	only for application mode
14	actual value = setpoint value (CP.2= Fcon, rcon; not at noP, LS, error, SSF)
15	acceleration (CP.2 = FAcc, rAcc, LAS)
16	deceleration (CP.2 = FdEc, rdEc, LdS)
17	clockwise rotation (not at noP, LS, error)
18	counter-clockwise rotation (not at noP, LS, error)
19	actual direction of rotation = set direction of rotation
20	actual value > frequency level CP.23 (only S-Version)
21	setpoint value > frequency level CP.23 (only S-Version)
22	only for application mode
23	ready-for-operation signal (after initialization provided no error exists)
24	Run-Signal (modulation on)
25	only for application mode

Factory setting:	2
Remarks:	Enter-Parameter
Customer setting:	_____

Frequency level

CP.23

This parameter defines the switching point for the relay output.
- X1.21...X1.23 (only C-Version)
- X1.1...X1.3 (only S-Version at CP.22 value "20" or "21"

After the switching of the relay the frequency can move within a window of 0.5 Hz without causing the relay to drop out.

Setting range:	0,0...409,58 Hz
Resolution:	0,0125 Hz
Factory setting:	4 Hz
Customer setting:	_____

© KEB Antriebstechnik, 1997
All Rights reserved

Setpoint signal

CP.24

The setpoint input REF (terminal X1.17) can be triggered with different signal levels. It acts adding to the differential voltage input (terminal X1.8 and X1), but can also serve as sole input for the setpoint value adjustment. To evaluate the signal correctly, the parameter must be adapted to the signal source.

Value	Setpoint signal
0	0...10 V DC / Ri = 4 kOhm
1	0...20 mA DC / Ri = 250 Ohm
2	4...20 mA DC / Ri = 250 Ohm

Factory setting: 0
Customer setting: _____

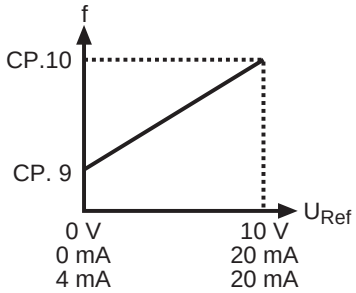

© KEB Antriebstechnik, 1997
All Rights reserved

1. Introduction

2. Summary

3. Hardware

4. Operation

5. Parameter

6. Functions

7. Start-up

8. Special Operation

9. Error Assistance

10. Project Planning

11. Networks

12. Applications

13. Annex

4.1 Fundamentals

4.2 Password Structure

4.3 CP-Parameter

4.4 Drive-Mode

4.4.1 Adjustment Possibilities 3
4.4.2 Display and Keyboard 3
4.4.3 Setpoint Display / Setpoint Input 3
4.4.4 Rotation Setting 4
4.4.5 Start / Stop / Run 4
4.4.6 Leaving the Drive-Mode 5
4.4.7 Further Settings 5

4.4 Drive-Mode

The Drive-Mode is a special operating mode of the KEB COMBIVERT. It allows an easy manual start-up. To activate the Drive-Mode enter the password „500“ in **‘CP.0’** or **‘ud.0’**. Following settings are possible:

4.4.1 Adjustment Possibilities

– Stop / Start / Run
– Setpoint value
– Direction of rotation

All other settings like setpoint limitation, acceleration time, deceleration time etc. correspond to the preselection in the parameter sets.

Hardware condition: The control release must be bridged!

4.4.2 Display and Keyboard

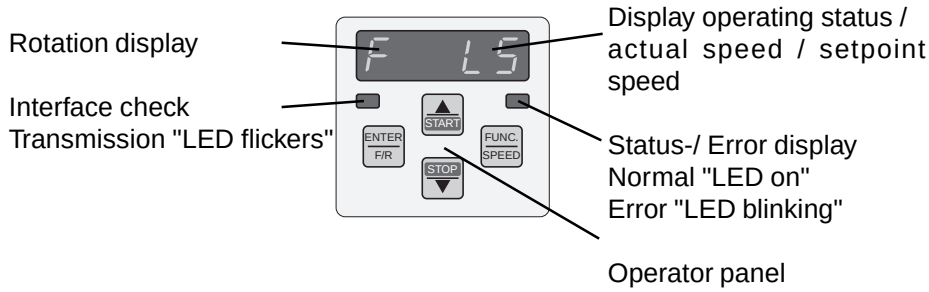

4.4.3 Setpoint Display / Setpoint Input

The setpoint entry via keyboard is possible only for parameter ud.9 = 0 ,2 or 4 (see 4.4.7).

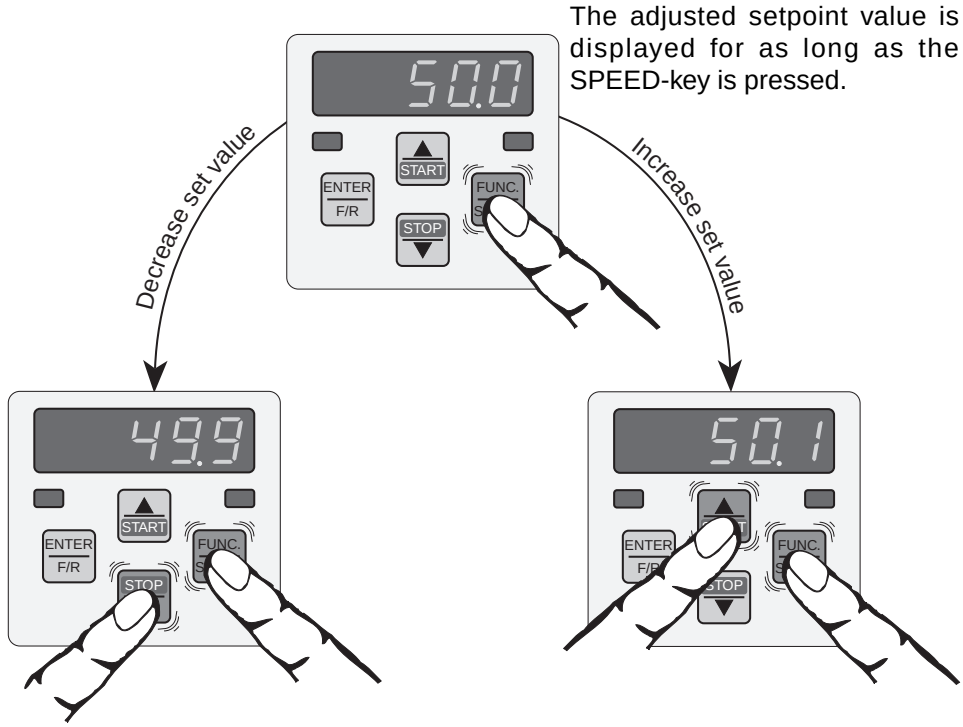

Press the SPEED-key and reduce the displayed setpoint value with the STOP-key.

Press the SPEED-key and increase the displayed setpoint value with the START-key.

4.4.4 Rotation Setting

Setting possibilities: **F** = forward (clockwise rotation)
r = reverse (counter-clockwise rotation)

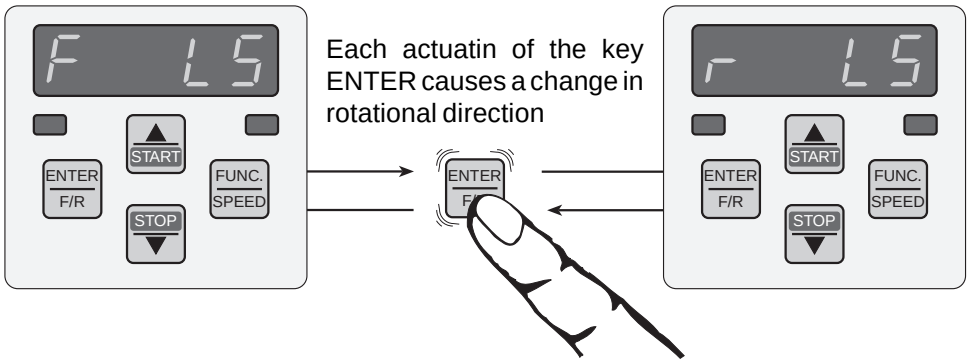

4.4.5 Start / Stop / Run

3 operating states exist in the Drive-Mode:

Status „Stop“	Status „Start“	Status „Run“
Power module disconnected, drive is freewheeling (e.g. „F LS“)	Power module is controlled with 0 Hz, drive stands with holding torque (e.g. „F 0.0“)	The drive runs with preselected frequency (e.g. „F 50.0“)

Among other things the parameter ud.9 determines in what way the keys START and STOP approach the individual operating states:

ud. 9 = 0 or 1
(standard)

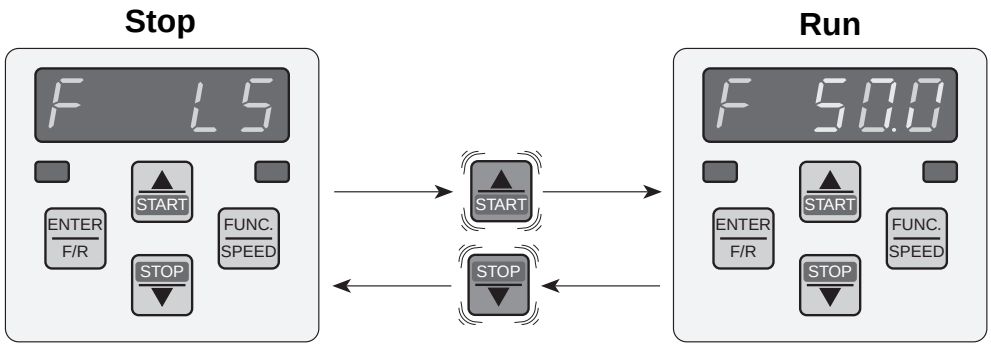

ud. 9 = 2 or 3

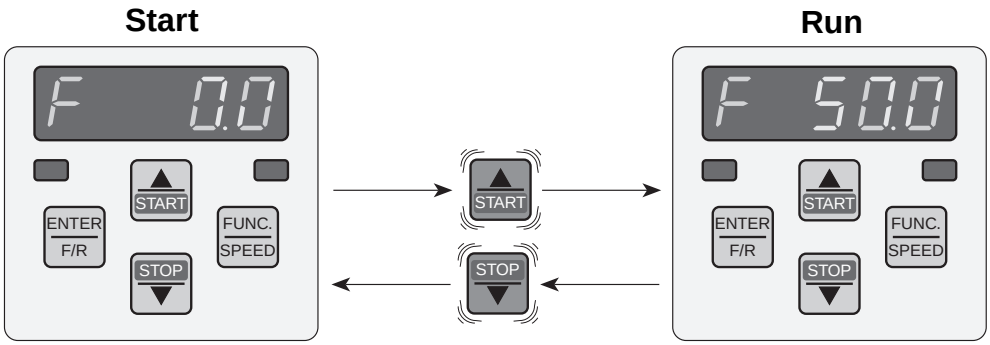

ud. 9 = 4 or 5

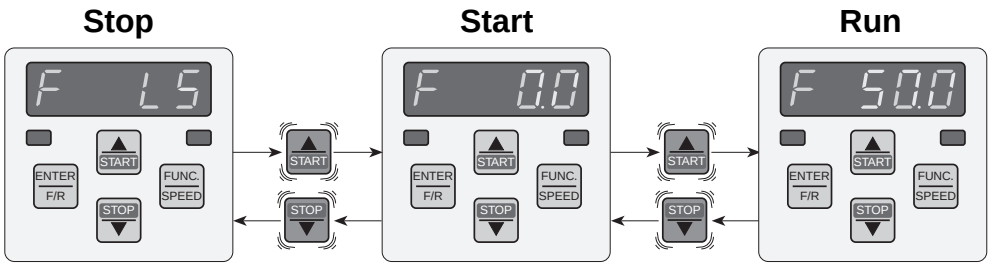

4

4.4.6 Leaving the Drive-Mode

To leave the Drive-Mode, the keys „FUNC“ and „ENTER“ must be pressed simultaneously for approx. 3 seconds while being in status „Stop“! The unit jumps back into the mode from where the Drive-Mode was started.

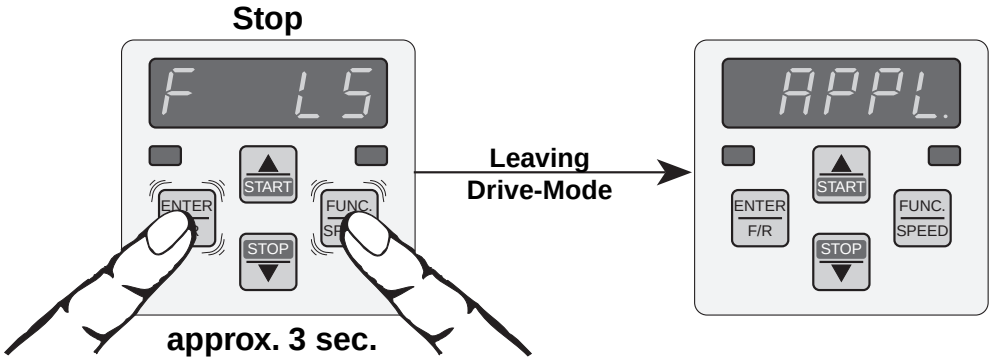

4.4.7 Further Settings

With the Drive-Mode operating mode (ud.9) the setpoint sources and the conditions at starting/stopping can be specified. As setpoint source serves either the keyboard in the Drive-Mode as described under 4.4.3 or the setpoint source selected under parameter oP.0. Refer to 4.4.5 to learn about the different operating conditions at starting/stopping.

Operation-Mode		*Set value source*	
ud. 9		*Keyboard*	*depend. oP. 0*
Condition	Stop / Run	ud. 9 = 0	ud. 9 = 1
	Start / Run	ud. 9 = 2	ud. 9 = 3
	Stop / Start / Run	ud. 9 = 4	ud. 9 = 5

! To avoid undefined conditions, it must be ensured that the minimum frequency (oP.4) is set to 0 Hz at the values ud.9 =2…5 .

1. Introduction

2. Summary

3. Hardware

4. Operation

5. Parameter

5.1 Parameter

5.1.1 Parameter Groups 3
5.1.2 Parameter Listing F4-C 5

6. Functions

7. Start-up

8. Special Operation

9. Error Assistance

10. Project Planning

11. Networks

12. Applications

13. Annex

5. Parameter

The frequency inverter KEB COMBIVERT F4-C contains 14 fixed and one free-to-define parameter group. We have already learned about the free-to-define group (CP). In the fixed parameter groups the parameters are combined function-related.

5.1 Parameter

5.1.1 Parameter Groups

Picture 5.1.1

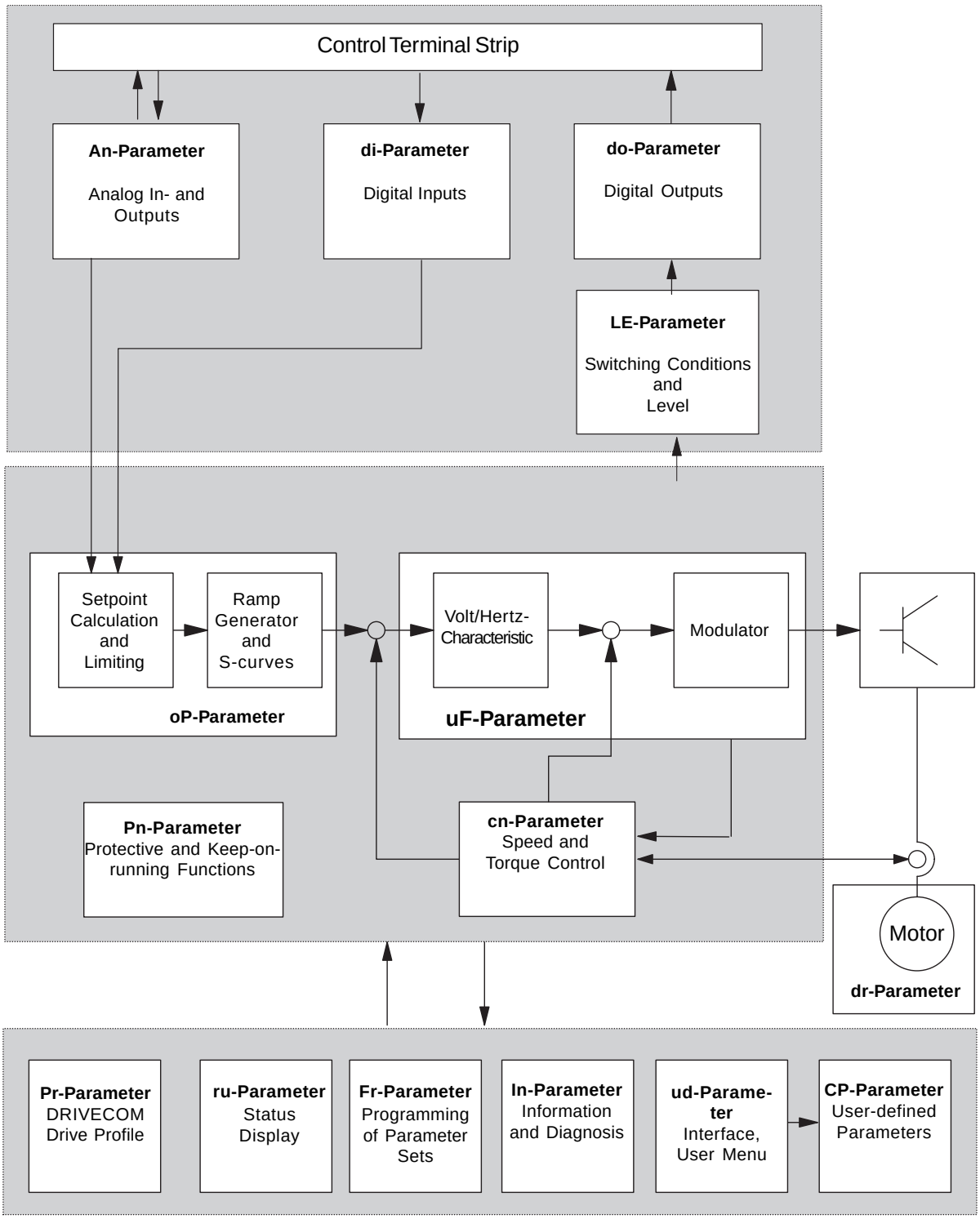

© KEB Antriebstechnik, 1997
All Rights reserved

© KEB Antriebstechnik, 1997
All Rights reserved

5.1.2 Parameter Listing F4-C

Pr - Parameter	Addr.				min	max		default	[?]	see page(s)
Pr 4 Pole Number	012A	-	-	√	2	12	2	4	-	11.2.4
Pr 5 Malfunction Code	0105	-	-	-	0	65535	1	-	-	11.2.4
Pr 6 Control Word	0106	-	-	√	0	65535	1	0	-	11.2.4; 11.2.8
Pr 7 Status Word	0107	-	-	-	0	65535	1	-	-	11.2.5; 11.2.8
Pr 8 Nominal Speed Value	0108	-	-	√	-32767	32767	1	0	rpm	11.2.5; 6.4.5
Pr 9 Actual Speed Value	0109	-	-	-	-32767	32767	1	-	rpm	11.2.5
Pr 10 Speed Min. Amount	010A	-	-	√	0	32767	1	0	rpm	11.2.5
Pr 11 Speed Max. Amount	010B	-	-	√	0	32767	1	1500	rpm	11.2.5
Pr 16 Acceleration Delta Speed	0110	-	-	√	1	32767	1	1500	rpm	11.2.5
Pr 18 Acceleration Delta Time	0112	-	-	√	0	32767	1	10	sec	11.2.6
Pr 25 Deceleration Delta Speed	0119	-	-	√	1	32767	1	1500	rpm	11.2.6
Pr 27 Deceleration Delta Time	011B	-	-	√	0	32767	1	10	sec	11.2.6
Pr 37 Speed Control Variable	0125	-	-	-	-32767	32767	1	-	rpm	11.2.6; 6.4.5
Pr 38 Set Value Percentage	0126	-	-	√	-200	200	0,61	0	%	11.2.6
Pr 39 Percentage Reference Value	0127	-	-	√	0	32767	1	1500	rpm	11.2.7
Pr 40 Actual Percentage	0128	-	-	-	-200	200	0,61	-	%	11.2.7
Pr 41 Percentage Control Variable	0129	-	-	-	-200	200	0,61	-	%	11.2.7
ru - Parameter	**Addr.**				**min**	**max**		**default**	**[?]**	**see page(s)**
ru 0 Inverter State	2000	-	-	-			table	-	-	6.1.5; 6.7.6; 6.12.4
ru 1 Actual Speed Display	2001	-	-	-			0,5	-	rpm	6.1.7; 6.10.9; 6.10.10
ru 3 Actual Frequency Display	2003	-	-	-	-409,5875	409,5875	0,0125	-	Hz	6.1.7; 6.7.6
ru 4 Set Speed Display	2004	-	-	-			0,5	-	rpm	6.1.7; 6.4.12
ru 6 Set Frequency Display	2006	-	-	-	-409,5875	409,5875	0,0125	-	Hz	6.1.8; 6.4.12
ru 7 Actual Inverter Utilization	2007	-	-	-	0	200	1	-	%	6.1.8; 6.7.6
ru 8 Peak Inverter Utilization	2008	-	-	√	0	200	1	-	%	6.1.8
ru 9 Apparent Current	2009	-	-	-			0,1	-	A	6.1.8
ru 10 Active Current	200A	-	-	-			0,1	-	A	6.1.8
ru 11 Actual DC Voltage	200B	-	-	-			1	-	V	6.1.9
ru 12 Peak DC Voltage	200C	-	-	√			1	-	V	6.1.9
ru 13 Output Voltage	200D	-	-	-	0		1	-	V	
ru 14 Input Terminal State	200E	-	-	-			table	-	-	6.1.9; 6.3.3; 6.3.4
ru 15 Output Terminal State	200F	-	-	-			table	-	-	6.1.10; 6.3.13
ru 16 Internal Input State	2010	-	-	-			table	-	-	6.1.10; 6.3.3; 6.3.8
ru 17 Internal Output State	2011	-	-	-			table	-	-	6.1.11
ru 18 Actual Parameterset	2012	-	-	-			table	-	-	6.1.11
ru 22 Ref 1 display	2016	-	-	-	-100,0	100,0	0,1	-	%	6.1.11; 6.2.10
ru 23 Ref 2 display	2017	-	-	-	-100,0	100,0	0,1	-	%	6.1.11; 6.2.10; 6.4.5
ru 24 OL Counter Display	2018	-	-	-	0	100	1	-	%	6.1.12; 6.4.5
ru 29 Heat Sink Temperature	201D	-	-	-			1	-	°C	6.1.12
ru 30 Ext. PI Output Display	201E	-	-	-	-100,0	100,0	0,1	-	%	6.1.12; 6.4.5; 6.11.5
ru 31 Power On Counter	201F	-	-	√	0	65535	1	-	h	6.1.12
ru 32 Modulation On Counter	2020	-	-	√	0	65535	1	-	h	6.1.12
ru 33 Timer A Act. Value	2021	-	-	√	0	327,67	0,01	0,00	s / h	6.1.13; 6.9.18
ru 34 Motorpoti Act. Value	2022	√	-	√	-100,00	100,00	0,01	0,00	%	6.1.13; 6.9.14; 6.9.15
ru 41 Analog Out 1 Display	2029	-	-	-	-100,0	100,0	0,1	-	%	6.1.13
ru 43 Programmable Display	202B	-	-	-	-32767	32767	-	-	-	6.1.13; 6.9.23
ru 44 Act. Switching Freq.	202C	-	-	-	1	16	1	-	kHz	6.1.13; 6.5.6
ru 45 Aanalog Option Display	202D	-	-	-			0,1	-	%	6.2.10; 6.10.9
ru 46 Ramp Frequency	202E	-	-	-			0,0125	-	Hz	6.4.12
ru 47 Act Encoder Frequency	202F	-	-	-			0,0125	-	Hz	6.10.10
oP - Parameter	**Addr.**				**min**	**max**		**default**	**[?]**	**see page(s)**
oP 0 Reference Source	2100	√	√	√	0	26	1	1	-	6.4.5; 6.4.6; 6.4.8; 6.9.15
oP 1 Freq. Reference Setting Abs.	2101	√	-	√	-409,5875	409,5875	0,0125	0,0000	Hz	6.4.5
oP 2 Freq. Reference Setting %	2102	√	-	√	-100,0	100,0	0,1	0,0	%	6.4.5
oP 3 Rotation Setting	2103	√	√	√	0	2	1	0	-	6.4.6
oP 4 Min. Freq. Reference Forward	2104	√	-	√	0,0000	409,5875	0,0125	0,0000	Hz	4.4.5; 6.4.5; 6.4.9; 6.9.14
oP 5 Max. Freq. Reference Forward	2105	√	-	√	0,0000	409,5875	0,0125	70,0000	Hz	6.4.5; 6.4.9
oP 6 Min. Freq. Reference Reverse	2106	√	-	√	-0,0125 : off	409,5875	0,0125	-0,0125 : off	Hz	6.4.5; 6.4.9; 6.9.14
oP 7 Max. Freq. Reference Reverse	2107	√	-	√	-0,0125 : off	409,5875	0,0125	-0,0125 : off	Hz	6.4.5; 6.4.9
oP 8 Abs. Max. Freq. Forward	2108	√	-	√	0,0000	409,5875	0,0125	409,5875	Hz	6.4.9
oP 9 Abs. Max. Freq. Reverse	2109	√	-	√	-0,0125 : off	409,5875	0,0125	-0,0125 : off	Hz	6.4.9
oP 10 Acc Dec Mode	210A	√	√	√	0	255	1	0	-	6.4.12; 6.4.16
oP 11 Acceleration Time Forward	210B	√	-	√	0,00	300,00	0,01	10,00	sec	6.4.13; 6.4.14
oP 12 Deceleration Time Forward	210C	√	-	√	0,00	300,00	0,01	10,00	sec	6.4.13; 6.4.14
oP 13 Acceleration Time Reverse	210D	√	-	√	-0,01 : off	300,00	0,01	-0,01 : off	sec	6.4.13; 6.4.14
oP 14 Deceleration Time Reverse	210E	√	-	√	-0,01 : off	300,00	0,01	-0,01 : off	sec	6.4.13; 6.4.14
oP 15 S-Curve Time Acc. Forward	210F	√	-	√	0 : off	5,00	0,01	0 : off	sec	6.4.14
oP 16 S-Curve Time Dec. Forward	2110	√	-	√	0 : off	5,00	0,01	0 : off	sec	6.4.14
oP 17 S-Curve Time Acc. Reverse	2111	√	-	√	0 : off	5,00	0,01	0 : off	sec	6.4.14
oP 18 S-Curve Time Dec. Reverse	2112	√	-	√	0 : off	5,00	0,01	0 : off	sec	6.4.14
oP 22 Step Frequency 1	2116	√	-	√	-409,5875	409,5875	0,0125	5,0000	Hz	6.4.11
oP 23 Step Frequency 2	2117	√	-	√	-409,5875	409,5875	0,0125	50,0000	Hz	6.4.11
oP 24 Step Frequency 3	2118	√	-	√	-409,5875	409,5875	0,0125	70,0000	Hz	6.4.11
oP 25 Step Frequency Mode	2119	√	√	√	0	3	1	2	-	6.4.11
oP 26 Motorpoti Function	211A	-	-	√	0	15	1	8	-	6.1.13; 6.9.14
oP 27 Motorpoti Min. Value	211B	-	-	√	-100,00	100,00	0,01	0,00	%	6.9.14
oP 28 Motorpoti Max. Value	211C	-	-	√	-100,00	100,00	0,01	100,00	%	6.9.14; 6.9.15

© KEB Antriebstechnik, 1997
All Rights reserved

oP 29	Motorpoti Inc./Dec. Time	211D	-	-	√	0,00	300,00	0,01	131,00	sec	6.9.14
oP 30	Motorpoti Prescaler	211E	-	√	√	0	8	1	0	-	6.9.14
oP 31	Motorpoti Destination	211F	-	√	√	0	2	1	0	-	6.9.15; 6.11.11
oP 32	Max. Output Freq. Forward	2120	√	-	√	0,0000	n. 2 (409,5875)	0,0125	n. 2 (409,5875)	Hz	6.11.11
oP 33	Max. Output Freq. Reverse	2121	√	-	√	-0,0125 : off	n. 2 (409,5875)	0,0125	-0,0125 : off	Hz	
Pn - Parameter		**Addr.**				min	max		default	[?]	**see page(s)**
Pn 0	Auto Restart UP	2200	-	-	√	0	1	1	1	-	6.7.8
Pn 1	Auto Restart UP	2201	-	-	√	0	1	1	0	-	6.7.8
Pn 2	Auto Restart OC	2202	-	-	√	0	1	1	0	-	6.7.8
Pn 3	Motorprotection / Mode	2203	√	-	√	0	4	1	0	-	6.7.9
Pn 4	LAD Stop Function	2204	√	-	√	0	7	1	1	-	6.7.3
Pn 5	LAD Load Level	2205	√	-	√	10	200 : off	1	140	%	6.7.3
Pn 6	LD Voltage	2206	√	-	√	200	800	1	720 / 375 (LTK)	V	6.7.3
Pn 7	Speed Search Condition	2207	√	-	√	0	15	1	8	-	6.7.7; 6.7.8
Pn 8	DC Braking Mode	2208	√	-	√	0	9	1	7	-	6.9.3
Pn 9	DC Braking Start Freq.	2209	√	-	√	0,0000	409,5875	0,0125	4,0000	Hz	6.9.3
Pn 10	DC Braking Max. Voltage	220A	√	-	√	0,0	25,5	0,1	25,5	%	6.9.3
Pn 11	DC Braking Time	220B	√	-	√	0,00	100,00	0,01	10,00	sec	6.9.3
Pn 12	Stall Mode	220C	√	-	√	0	8	1	1	-	6.7.5; 6.7.6
Pn 13	Stall Level	220D	√	-	√	10	200 : off	1	200	%	6.3.11; 6.7.6
Pn 14	Stall Acc/Dec Time	220E	√	-	√	0,00	300,00	0,01	10,00	sec	6.7.5; 6.7.6
Pn 15	Motorprotection / Counter Selection	220F	√	-	√	0	max. set	1	0	-	6.7.9
Pn 16	E.dOH Delay Time	2210	-	-	√	0	120	1	10	sec	6.3.11; 6.7.10
Pn 17	Power Off Starting Voltage	2211	-	-	√	198 : Off	800	1	198 : Off	V	6.9.7; 6.9.8
Pn 18	Power Off Braking Torque	2212	-	-	√	0 : uzk-Mode	100	0,1	0 : uzk-Mode	%	6.9.7; 6.9.9
Pn 19	Power Off Restart Frequency	2213	-	-	√	0,0000	409,5875	0,0125	0,0000	Hz	6.9.8; 6.9.10
Pn 33	Power Off Mode	2221	-	-	√	0	63	1	2	-	6.9.8
Pn 34	Power Off KP Uzk	2222	-	-	√	0	2000	1	512	-	6.9.9
Pn 36	Power Off KP Iw	2224	-	-	√	0	2000	1	50	-	6.9.9
Pn 37	Power Off KI Iw	2225	-	-	√	0	2000	1	50	-	6.9.9
Pn 38	Power Off Jump Factor	2226	-	-	√	0	255	1	100	%	6.9.8
Pn 42	Power Off Set Voltage	222A	-	-	√	199 : Auto	800	1	199 : Auto	V	6.9.7; 6.9.9
Pn 43	Power Off Wait Time	222B	-	-	√	0,00	100,00	0,01	0,00	sec	6.9.10
Pn 50	Speed Search Mode	2232	-	-	√	0	127	1	0	-	6.7.7; 6.7.8
Pn 51	Brake Mode	2233	√	-	√	0	2	1	0	-	6.9.20
Pn 52	Start Time 1	2234	√	-	√	0,00	100,00	0,01	1,00	sec	6.9.19
Pn 53	Start Time 2	2235	√	-	√	0,00	100,00	0,01	1,00	sec	6.9.19
Pn 54	Start Frequency	2236	√	-	√	-50,0000	50,0000	0,0125	2,0000	Hz	6.9.19; 6.9.21
Pn 55	Stop Time 1	2237	√	-	√	0,00	100,00	0,01	1,00	sec	6.9.19
Pn 56	Stop Time 2	2238	√	-	√	0,00	100,00	0,01	1,00	sec	6.9.19
Pn 57	Stop Frequency	2239	√	-	√	-50,0000	50,0000	0,0125	2,0000	Hz	6.9.21
Pn 58	Min. Load for Brake Control	223A	√	-	√	0	100	1	0	%	6.9.19; 6.9.20
Pn 61	Auto Restart E.net	223D	-	-	√	0	1	1	1	-	
uF - Parameter		**Addr.**				min	max		default	[?]	**see page(s)**
uF 0	Rated Frequency	2300	√	-	√	0,0000	409,5875	0,0125	50,0000	Hz	6.5.3
uF 1	Boost	2301	√	-	√	0,0	25,5	0,1	2,0	%	6.5.3
uF 2	Additional Rated Freq.	2302	√	-	√	0,0000	409,5875	0,0125	0,0000	Hz	6.5.3
uF 3	Additional Rated Voltage	2303	√	-	√	0,0	100,0	0,1	0,0	%	6.5.3
uF 4	Delta Boost	2304	√	-	√	0,0	25,5	0,1	0,0	%	6.5.4
uF 5	Delta Boost Time	2305	√	-	√	0,00	10,00	0,01	0,00	sec	6.5.4
uF 6	Energy Saving Mode	2306	√	-	√	0	7	1	3	-	6.9.5
uF 7	Energy Saving Level	2307	√	-	√	0	150	1	70	%	6.9.5
uF 8	DC Voltage Compensation	2308	√	-	√	1	650 : off	1	650 : off	V	6.5.4
uF 9	Min. Freq. For Modulation	2309	√	-	√	0,0000	409,5875	0,0125	0,0000	Hz	6.5.5
uF 10	Modulation Mode	230A	√	-	√	0	1	1	1	-	6.5.5
uF 11	Carrier Frequency	230B	√	-	√	1	In. 3	1	LTK	kHz	6.5.3; 6.5.6
uF 16	Current Limitation ON/OFF	2310	-	-	√	0	2	1	1	-	6.7.3
uF 17	Transistor on Delay Time Comp. ON/OFF	2311	-	-	√	0	1 / 2 (LTK)	1	1	-	6.7.11
dr - Parameter		**Addr.**				min	max		default	[?]	**see page(s)**
dr 1	Rated Motor Speed	2401	√	-	√	0	65535	1	LTK	rpm	6.6.3
dr 2	Rated Motor Current	2402	√	-	√	0,0	370,0	0,1	LTK	A	6.6.3; 6.7.9
dr 3	Rated Motor Frequency	2403	√	-	√	0,0000	409,5875	0,0125	50,0000	Hz	6.6.3
dr 4	Rated Motor cos(Phi)	2404	√	-	√	0,50	1,00	0,01	LTK	-	6.6.3
dr 5	Motor Terminal Resistance	2405	√	-	√	0,00	LTK	0,01	LTK	Ohm	6.6.4
dr 12	Rated motor voltage	240C	√	-	√	150	500	1	LTK	V	6.6.3
dr 22	Breakdown Factor	2416	√	-	√	1,0	4,0	0,1	2,5	-	6.6.3
dr 24	Interface Select	2418	-	-	√	0	7	1	0	-	6.10.7; 6.10.10
dr 25	Encoder 1 (inc/r)	2419	-	-	√	1	10000	1	2500	inc/r	6.10.8
dr 29	Change Encoder 1 Rotation	241D	-	-	√	0	1	1	0	-	6.10.9
dr 30	Encoder 2 (inc/r)	241E	-	-	√	1	10000	1	2500	inc/r	6.10.8; 6.10.10
dr 34	Change Encoder 2 Rotation	2422	-	-	√	0	1	1	0	-	6.10.9; 6.10.10
dr 35	Gear Ratio Channel 1	2423	-	-	√	-20,000	20,000	0,001	1,000	-	6.9.15; 6.10.10
dr 36	Gear Ratio Channel 2	2424	-	-	√	-20,000	20,000	0,001	1,000	-	6.9.15; 6.10.9
dr 37	Filter Encoder 1	2425	-	-	√	0	6	1	0	-	6.10.8; 6.10.9
dr 38	Filter Encoder 2	2426	-	-	√	0	6	1	0	-	6.10.8; 6.10.9; 6.10.10
dr 43	Initiator Direction	242B	-	-	√	0	1	1	0	-	
dr 44	Reference Speed Tacho Evaluation	242C	-	-	√	0	9999	1	1500	rpm	6.10.9
cn - Parameter		**Addr.**				min	max		default	[?]	**see page(s)**
cn 0	Control Mode	2500	√	-	√	0	255	1	3	-	6.11.4; 6.11.5
cn 1	Slip Compensation Gain	2501	√	-	√	-2,50	2,50	0,01	0,00	-	6.11.6
cn 2	Torque Compensation Gain	2502	√	-	√	-2,50	2,50	0,01	0,00	-	6.11.6
cn 3	Act. Speed Source	2503	√	-	√	0	2	1	0	-	6.1.7; 6.10.9; 6.10.10
cn 10	Ext. PI Add Ref Fmin	250A	√	-	√	0,0000	409,5875	0,0125	10,0000	Hz	6.11.7
cn 11	Ext. PI Add Ref Fmax	250B	√	-	√	0,0000	409,5875	0,0125	50,0000	Hz	6.11.7
cn 12	Ext. PI Add Ref Source	250C	-	-	√	0	3	1	0	-	6.11.7
cn 13	Ext. PI Add Ref Function	250D	√	-	√	0	3	1	0	-	6.11.7; 6.11.8

© KEB Antriebstechnik, 1997
All Rights reserved

cn 14	Ext. PI Delta Ref Max.	250E	√	-	√	0,0	100,0	0,1	100,0	%	6.11.7; 6.11.8
cn 15	Ext. PI Ref Absolut	250F	√	-	√	-100,0	100,0	0,1	0,0	%	6.11.7
cn 16	Ext. PI KP	2510	√	-	√	0,00	250,00	0,01	0,00	-	6.11.3
cn 17	Ext. PI KI	2511	√	-	√	0,000	30,000	0,001	0,000	-	6.11.3
cn 18	Ext. PI Pos. Max.	2512	-	-	√	0,0	100,0	0,1	100,0	%	6.11.3
cn 19	Ext. PI Neg. Min.	2513	-	-	√	-100,0	0,0	0,1	-100,0	%	6.11.3
cn 20	Ext. PI act. Value Source	2514	-	-	√	0	5	1	0	-	6.11.9
cn 21	Ext. PI Reset Condition	2515	√	-	√	0	2	1	0	-	6.11.3
cn 22	Ext. PI Act. Value Absolut	2516	-	-	√	-100,0	100,0	0,1	0,0	%	
cn 25	Ext. PI Frequency Ratio	2519	-	-	√	0,000	3,000	0,001	0,010	Hz/%	6.11.3; 6.11.4
cn 26	Ext. PI Fade In Time	251A	-	-	√	-0,01	300,00	0,01	0,00	sec	6.11.3; 6.11.4
cn 27	Ext. PI Frequency Limit	251B	-	-	√	-204,7875	204,7875	0,0125	25,0000	Hz	6.11.11
cn 30	Diameter Compensation Source	251E	-	-	√	0	4	1	0	-	6.11.10
cn 31	Digital Diameter Input	251F	-	-	√	0,0	100,0	0,1	50,0	%	6.11.10
cn 32	Diameter Ratio	2520	-	-	√	0,010	0,990	0,001	0,500	-	6.11.10
cn 33	Diameter Inc/Dec Time	2521	-	-	√	0,00	300,00	0,01	5,00	sec	6.11.11
ud - Parameter		Addr.				min	max		default	[?]	see page(s)
ud 0	Key Password Input	2600	-	√	√	0	9999	1	cp_on	-	4.4.3; 6.12.3
ud 1	Bus Password Input	2601	-	-	√	-32767	32767	1	cp_on	-	
ud 2	Start Parameter Group	2602	-	-	√	1 : ru	table	table	1 : ru	-	6.12.4
ud 3	Start Parameter Number	2603	-	-	√	0	255	table	1	-	6.12.4
ud 5	Controlword Activation	2605	-	-	√	0	7	1	0	-	11.2.4
ud 6	Inverter Address	2606	-	√	√	0	239	1	1	-	11.2.3
ud 7	Baud Rate	2607	-	√	√	0 : 1200	6 : 57600	table	3 : 9600	Baud	11.2.3
ud 8	Watchdog Time	2608	-	√	√	0 : off	10,00	0,01	0 : off	sec	11.2.3
ud 9	Drive Mode Control	2609	-	-	√	0	5	1	0	-	4.4.3
ud 10	Display Mode	260A	-	-	√	0	1	1	0	-	6.1.8
ud 11	Maximum Frequency Mode	260B	-	-	√	0	1 / 2 (LTK)	1	0	-	6.1.16; 6.5.3
ud 13	cP0 Address	260D	-	-	-	-	-	1	-	-	
ud 14	cP0 Set	260E	-	-	-	-	-	1	-	-	
ud 15	cP1 Address	260F	-	-	√	-1 : off	7FFF	1	2003 (ru. 3)	-	6.12.13; 6.12.14
ud 16	cP1 Set	2610	-	-	√	0	8 : A	1	0	-	6.12.13; 6.12.14
ud 17	cP2 Address	2611	-	-	√	-1 : off	7FFF	1	2000 (ru. 0)	-	6.12.13; 6.12.14
ud 18	cP2 Set	2612	-	-	√	0	8 : A	1	0	-	6.12.13; 6.12.14
ud 19	cP3 Address	2613	-	-	√	-1 : off	7FFF	1	2007 (ru. 7)	-	6.12.13; 6.12.14
ud 20	cP3 Set	2614	-	-	√	0	8 : A	1	0	-	6.12.13; 6.12.14
ud 21	cP4 Address	2615	-	-	√	-1 : off	7FFF	1	2008 (ru. 8)	-	6.12.13; 6.12.14
ud 22	cP4 Set	2616	-	-	√	0	8 : A	1	0	-	6.12.13; 6.12.14
ud 23	cP5 Address	2617	-	-	√	-1 : off	7FFF	1	2300 (uF. 0)	-	6.12.13; 6.12.14
ud 24	cP5 Set	2618	-	-	√	0	8 : A	1	0	-	6.12.13; 6.12.14
ud 25	cP6 Address	2619	-	-	√	-1 : off	7FFF	1	2301 (uF. 1)	-	6.12.13; 6.12.14
ud 26	cP6 Set	261A	-	-	√	0	8 : A	1	0	-	6.12.13; 6.12.14
ud 27	cP7 Address	261B	-	-	√	-1 : off	7FFF	1	210B (oP.11)	-	6.12.13; 6.12.14
ud 28	cP7 Set	261C	-	-	√	0	8 : A	1	0	-	6.12.13; 6.12.14
ud 29	cP8 Address	261D	-	-	√	-1 : off	7FFF	1	210C (oP.12)	-	6.12.13; 6.12.14
ud 30	cP8 Set	261E	-	-	√	0	8 : A	1	0	-	6.12.13; 6.12.14
ud 31	cP9 Address	261F	-	-	√	-1 : off	7FFF	1	2104 (oP. 4)	-	6.12.13; 6.12.14
ud 32	cP9 Set	2620	-	-	√	0	8 : A	1	0	-	6.12.13; 6.12.14
ud 33	cP10 Address	2621	-	-	√	-1 : off	7FFF	1	2105 (oP. 5)	-	6.12.13; 6.12.14
ud 34	cP10 Set	2622	-	-	√	0	8 : A	1	0	-	6.12.13; 6.12.14
ud 35	cP11 Address	2623	-	-	√	-1 : off	7FFF	1	2116 (oP.22)	-	6.12.13; 6.12.14
ud 36	cP11 Set	2624	-	-	√	0	8 : A	1	0	-	6.12.13; 6.12.14
ud 37	cP12 Address	2625	-	-	√	-1 : off	7FFF	1	2117 (oP.23)	-	6.12.13; 6.12.14
ud 38	cP12 Set	2626	-	-	√	0	8 : A	1	0	-	6.12.13; 6.12.14
ud 39	cP13 Address	2627	-	-	√	-1 : off	7FFF	1	2118 (oP.24)	-	6.12.13; 6.12.14
ud 40	cP13 Set	2628	-	-	√	0	8 : A	1	0	-	6.12.13; 6.12.14
ud 41	cP14 Address	2629	-	-	√	-1 : off	7FFF	1	2205 (Pn. 5)	-	6.12.13; 6.12.14
ud 42	cP14 Set	262A	-	-	√	0	8 : A	1	0	-	6.12.13; 6.12.14
ud 43	cP15 Address	262B	-	-	√	-1 : off	7FFF	1	220D (Pn.13)	-	6.12.13; 6.12.14
ud 44	cP15 Set	262C	-	-	√	0	8 : A	1	0	-	6.12.13; 6.12.14
ud 45	cP16 Address	262D	-	-	√	-1 : off	7FFF	1	2207 (Pn. 7)	-	6.12.13; 6.12.14
ud 46	cP16 Set	262E	-	-	√	0	8 : A	1	0	-	6.12.13; 6.12.14
ud 47	cP17 Address	262F	-	-	√	-1 : off	7FFF	1	2308 (uF. 8)	-	6.12.13; 6.12.14
ud 48	cP17 Set	2630	-	-	√	0	8 : A	1	0	-	6.12.13; 6.12.14
ud 49	cP18 Address	2631	-	-	√	-1 : off	7FFF	1	2501 (cn. 1)	-	6.12.13; 6.12.14
ud 50	cP18 Set	2632	-	-	√	0	8 : A	1	0	-	6.12.13; 6.12.14
ud 51	cP19 Address	2633	-	-	√	-1 : off	7FFF	1	2502 (cn. 2)	-	6.12.13; 6.12.14
ud 52	cP19 Set	2634	-	-	√	0	8 : A	1	0	-	6.12.13; 6.12.14
ud 53	cP20 Address	2635	-	-	√	-1 : off	7FFF	1	2208 (Pn. 8)	-	6.12.13; 6.12.14
ud 54	cP20 Set	2636	-	-	√	0	8 : A	1	0	-	6.12.13; 6.12.14
ud 55	cP21 Address	2637	-	-	√	-1 : off	7FFF	1	220B (Pn.11)	-	6.12.13; 6.12.14
ud 56	cP21 Set	2638	-	-	√	0	8 : A	1	0	-	6.12.13; 6.12.14
ud 57	cP22 Address	2639	-	-	√	-1 : off	7FFF	1	2A02 (do. 2)	-	6.12.13; 6.12.14
ud 58	cP22 Set	263A	-	-	√	0	8 : A	1	0	-	6.12.13; 6.12.14
ud 59	cP23 Address	263B	-	-	√	-1 : off	7FFF	1	2B02 (LE. 2)	-	6.12.13; 6.12.14
ud 60	cP23 Set	263C	-	-	√	0	8 : A	1	0	-	6.12.13; 6.12.14
ud 61	cP24 Address	263D	-	-	√	-1 : off	7FFF	1	2806 (An. 6)	-	6.12.13; 6.12.14
ud 62	cP24 Set	263E	-	-	√	0	8 : A	1	0	-	6.12.13; 6.12.14
ud 87	Display Scaling Source	2657	-	-	√	0	4	1	0	-	6.1.13; 6.9.23; 6.9.24
ud 88	Display Scaling Multiplier	2658	-	-	√	-9999	9999	1	1500	-	6.9.23; 6.9.24
ud 89	Display Scaling Divisor	2659	-	-	√	1	9999	1	4000	-	6.9.24
ud 90	Display Scaling Offset	265A	-	-	√	-9999	9999	1	0	-	6.9.24
ud 91	Display Scaling Post Dec. Pos	265B	-	-	√	0	4	1	0	-	6.1.13; 6.9.23
Fr - Parameter		Addr.				min	max		default	[?]	see page(s)
Fr 0	Copy Para Set (Key)	2700	√	√	-	-2 : init	7	1	0	-	6.8.3; 6.12.3
Fr 1	Copy Para Set (Bus)	2701	-	-	√	-2 : init	7	1	0	-	6.8.3; 6.12.3
Fr 2	Parameter Set Source	2702	-	√	√	0	3	1	0	-	6.8.5; 6.8.6
Fr 3	Parameter Set Lock	2703	-	√	√	0	255	1	0	-	6.8.6
Fr 4	Parameter Set Setting	2704	-	√	√	0	7	1	0	-	6.8.5

© KEB Antriebstechnik, 1997
All Rights reserved

Fr 5	Parameter Set Activation Delay	2705	√	-	√	0	2,55	0,01	0	sec	6.8.7
Fr 6	Parameter Set Deactivation Delay	2706	√	-	√	0	2,55	0,01	0	sec	6.8.7
Fr 9	Bus Parameter Set	2709	-	-	√	-1 : act.	7	1	0	-	6.8.3
An - Parameter		**Addr.**				min	max		default	[?]	**see page(s)**
An 1	Noise Filter Ref 1	2801	-	-	√	0	4	1	0	-	6.2.4; 6.2.10
An 2	Zero Clamp Ref 1	2802	-	-	√	-10,0	10,0	0,1	0,2	%	6.2.7; 6.2.10
An 3	Ref 1 Gain	2803	-	-	√	-20,00	20,00	0,01	1,00	-	6.2.6; 6.2.10
An 4	Ref 1 Offset X	2804	-	-	√	-100,0	100,0	0,1	0,0	%	6.2.6; 6.2.10
An 5	Ref 1 Offset Y	2805	-	-	√	-100,0	100,0	0,1	0,0	%	6.2.6; 6.2.10
An 6	Ref 2 - Interface - Definition	2806	-	√	√	0	2	1	0	-	6.2.4; 6.2.10
An 7	Noise Filter Ref 2	2807	-	-	√	0	4	1	0	-	6.2.4; 6.2.10
An 8	Zero Clamp Ref 2	2808	-	-	√	-10,0	10,0	0,1	0,2	%	6.2.7; 6.2.10
An 9	Ref 2 Gain	2809	-	-	√	-20,00	20,00	0,01	1,00	-	6.2.6; 6.2.10
An 10	Ref 2 Offset X	280A	-	-	√	-100,0	100,0	0,1	0,0	%	6.2.6; 6.2.10
An 11	Ref 2 Offset Y	280B	-	-	√	-100,0	100,0	0,1	0,0	%	6.2.6; 6.2.10
An 12	Reference/Aux Selection	280C	√	√	√	0	1	1	0	-	6.2.7; 6.2.10
An 13	Aux Function	280D	√	√	√	0	6	1	1	-	6.4.5
An 14	Analog Out1 Function	280E	√	-	√	0	6	1	0	-	6.2.8; 6.2.10
An 15	Analog Out1 Gain	280F	√	-	√	-20,00	20,00	0,01	1,00	-	6.2.8; 6.2.9; 6.2.10
An 16	Analog Out1 Offset X	2810	√	-	√	-100,0	100,0	0,1	0,0	%	6.2.8; 6.2.9; 6.2.10
An 17	Analog Out1 Offset Y	2811	√	-	√	-100,0	100,0	0,1	0,0	%	6.2.8; 6.2.9; 6.2.10
An 22	Analog In Mode	2816	-	√	√	0	255	1	0	-	6.2.5; 6.2.7; 6.2.8; 6.2.10; 6.10.9
An 23	Analog Option Gain	2817	-	-	√	-20,00	20,00	0,01	1,00	-	6.2.6; 6.2.10; 6.10.9
An 24	Analog Option Offset X	2818	-	-	√	-100,0	100,0	0,1	0,0	%	6.2.6; 6.2.10; 6.10.9
An 25	Analog Option Offset Y	2819	-	-	√	-100,0	100,0	0,1	0,0	%	6.2.6; 6.2.10; 6.10.9
An 26	Noise Filter Analog Option	281A	-	-	√	0	4	1	0	-	6.2.4; 6.2.10
An 27	Zero Clamp Analog Option	281B	-	-	√	0,0	10,0	0,1	0,2	%	6.2.7; 6.2.10
di - Parameter		**Addr.**				min	max		default	[?]	**see page(s)**
di 0	Noise Filter Digital	2900	-	-	√	0	31	1	0	-	6.3.3; 6.3.5
di 1	NPN/PNP Selection	2901	-	√	√	0 : pnp	1 : npn	1	0 : pnp	-	6.3.3
di 2	Input Logic	2902	-	√	√	0	255	1	0	-	6.3.3; 6.3.5
di 3	Input Function I1	2903	-	√	√	0	16	1	9	-	6.3.3; 6.3.8; 6.4.11
di 4	Input Function I2	2904	-	√	√	0	16	1	9	-	6.3.8; 6.4.11
di 5	Input Function I3	2905	-	√	√	0	16	1	3	-	6.3.8
di 6	Input Function I4	2906	-	√	√	0	16	1	4	-	6.3.3; 6.3.8
di 7	Input Function IA	2907	-	√	√	0	16	1	0	-	6.3.3; 6.3.8
di 8	Input Function IB	2908	-	√	√	0	16	1	0	-	6.3.8
di 9	Input Function IC	2909	-	√	√	0	16	1	0	-	6.3.8
di 10	Input Function ID	290A	-	√	√	0	16	1	0	-	6.3.3; 6.3.8
di 14	Input Trigger	290E	-	√	√	0	255	1	0	-	6.3.3; 6.3.5
di 15	Select Signal Source	290F	-	√	√	0	255	1	0	-	6.3.3; 6.3.4; 6.3.5
di 16	Digital Input Setting	2910	-	√	√	0	255	1	0	-	6.3.3; 6.3.4; 6.3.5
di 17	Input Strobe Dependance	2911	-	√	√	0	255	1	0	-	6.3.3; 6.3.6
di 18	Select Strobe Source	2912	-	√	√	0	255	1	0	-	6.3.6
di 19	Select Strobe Mode	2913	-	√	√	0	1	1	0	-	6.3.3; 6.3.7
di 20	Rotation Input	2914	-	√	√	0: Run/Stop	2: F/R + release	1	1: F/R	-	6.3.3; 6.3.7; 6.4.7
di 21	Reset Mode for ST	2915	-	-	√	0: neg. edge	2: no reset	1	0: neg. edge	-	6.3.8
do - Parameter		**Addr.**				min	max		default	[?]	**see page(s)**
do 0	Output Logic	2A00	√	√	√	0	255	1	0	-	6.3.13
do 1	Output Condition 1	2A01	√	√	√	0	37	1	14	-	6.1.11; 6.7.3
do 2	Output Condition 2	2A02	√	√	√	0	37	1	2	-	
do 3	Output Condition 3	2A03	√	√	√	0	37	1	20	-	
do 4	Output Condition 4	2A04	√	√	√	0	37	1	0	-	
do 9	Select Out 1 Condition	2A09	√	√	√	0	15	1	1	-	6.3.12
do 10	Select Out 2 Condition	2A0A	√	√	√	0	15	1	2	-	6.3.12
do 11	Select Out 3 Condition	2A0B	√	√	√	0	15	1	4	-	6.3.12
do 13	Select Out A Condition	2A0D	√	√	√	0	15	1	0	-	6.3.12
do 14	Select Out B Condition	2A0E	√	√	√	0	15	1	0	-	6.3.12
do 15	Select Out C Condition	2A0F	√	√	√	0	15	1	0	-	6.3.12
do 16	Select Out D Condition	2A10	√	√	√	0	15	1	0	-	6.3.12
do 17	Out 1 Condition Logic	2A11	√	√	√	0	15	1	0	-	6.3.12
do 18	Out 2 Condition Logic	2A12	√	√	√	0	15	1	0	-	6.3.12
do 19	Out 3 Condition Logic	2A13	√	√	√	0	15	1	0	-	6.3.12
do 21	Out A Condition Logic	2A15	√	√	√	0	15	1	0	-	6.3.12
do 22	Out B Condition Logic	2A16	√	√	√	0	15	1	0	-	6.3.12
do 23	Out C Condition Logic	2A17	√	√	√	0	15	1	0	-	6.3.12
do 24	Out D Condition Logic	2A18	√	√	√	0	15	1	0	-	6.3.12
do 25	Output Condition Connection	2A19	√	√	√	0	255	1	0	-	6.3.12
LE - Parameter		**Addr.**				min	max		default	[?]	**see page(s)**
LE 0	Frequency Level 1	2B00	√	-	√	0,0000	409,5875	0,0125	0,0000	Hz	6.3.11
LE 1	Frequency Level 2	2B01	√	-	√	0,0000	409,5875	0,0125	4,0000	Hz	6.3.11
LE 2	Frequency Level 3	2B02	√	-	√	0,0000	409,5875	0,0125	4,0000	Hz	6.3.11
LE 3	Frequency Level 4	2B03	√	-	√	0,0000	409,5875	0,0125	50,0000	Hz	6.3.11
LE 8	Load Level 1	2B08	√	-	√	0	200	1	50	%	6.3.11
LE 9	Load Level 2	2B09	√	-	√	0	200	1	100	%	6.3.11
LE 10	Load Level 3	2B0A	√	-	√	0	200	1	100	%	6.3.11
LE 11	Load Level 4	2B0B	√	-	√	0	200	1	100	%	6.3.11
LE 16	Active Current Level 1	2B10	√	-	√	0,0	370,0	0,1	0,0	A	
LE 17	Active Current Level 2	2B11	√	-	√	0,0	370,0	0,1	0,0	A	
LE 18	Active Current Level 3	2B12	√	-	√	0,0	370,0	0,1	0,0	A	
LE 19	Active Current Level 4	2B13	√	-	√	0,0	370,0	0,1	0,0	A	
LE 24	DC Voltage Level 1	2B18	√	-	√	100	LTK	1	250	V	6.3.11
LE 25	DC Voltage Level 2	2B19	√	-	√	100	LTK	1	250	V	
LE 26	DC Voltage Level 3	2B1A	√	-	√	100	LTK	1	250	V	
LE 27	DC Voltage Level 4	2B1B	√	-	√	100	LTK	1	250	V	6.3.11
LE 32	OL Warning Level	2B20	√	-	√	0	100	1	80	%	

© KEB Antriebstechnik, 1997
All Rights reserved

LE 34	OH Warning Level	2B22	√	-	√	0	100	1	70	degrees	
LE 35	Timer Value	2B23	√	-	√	0,00	100,00	0,01	0,00	sec	6.3.11; 6.9.17
LE 36	Frequency Hysteresis	2B24	-	-	√	0,0000	20,0000	0,0125	0,5000	Hz	
LE 41	Timer A Level 1	2B29	√	-	√	0,00	300,00	0,01	0,00	sec / hour	6.1.13; 6.3.11; 6.9.18
LE 42	Timer A Level 2	2B2A	√	-	√	0,00	300,00	0,01	0,00	sec / hour	6.9.18
LE 43	Timer A Level 3	2B2B	√	-	√	0,00	300,00	0,01	0,00	sec / hour	6.9.18
LE 44	Timer A Level 4	2B2C	√	-	√	0,00	300,00	0,01	0,00	sec / hour	6.9.18
LE 45	Timer A Reset Condition	2B2D	-	-	√	0	15	1	8192	-	6.9.18
LE 46	Timer A Inc Condition	2B2E	-	-	√	0	15	1	2047	-	6.9.17
LE 47	Timer A Resolution	2B2F	-	-	√	0 : 0,01 sec	1 : 0,01 h	1	0 : 0,01 sec	-	6.9.17
LE 62	Percentage Level 1	2B3E	√	-	√	-400,0	400,0	0,1	0,0	%	6.3.11
LE 63	Percentage Level 2	2B3F	√	-	√	-400,0	400,0	0,1	0,0	%	
LE 64	Percentage Level 3	2B40	√	-	√	-400,0	400,0	0,1	0,0	%	
LE 65	Percentage Level 4	2B41	√	-	√	-400,0	400,0	0,1	0,0	%	6.3.11
LE 69	Analog Hysteresis	2B45	-	-	√	0,0	20,0	0,1	2,0	%	6.3.11
In - Parameter		**Adr.**				min	max		default	**[?]**	**see Page(s)**
In 0	Inverter Type	2C00	-	-	-			table	type plate	-	6.1.15
In 1	Rated Inverter Current	2C01	-	-	-	0	370	0,1	LTK	A	6.1.15
In 2	Max. Output Frequency	2C02	-	-	√	0	409,5875	0,0125	409,5875	Hz	6.1.16
In 3	Max. Carrier Frequency	2C03	-	-	-	1	LTK	1	LTK	kHz	6.1.16
In 4	Software Version	2C04	-	-	-			1		-	6.1.16
In 5	Software Date	2C05	-	-	-			0,1		-	6.1.16
In 6	Configfile No.	2C06	-	-	√	conf.no.	conf.no.	1	conf.no.	-	6.1.16
In 7	Serial No. (Date)	2C07	-	-	√	0	65535	1	0	-	6.1.17
In 8	Serial No. (Counter)	2C08	-	-	√	0	65535	1	0	-	6.1.17
In 9	Serial No. (AB-no. High)	2C09	-	-	√	0	65535	1	0	-	6.1.17
In 10	Serial No. (AB-no. Low)	2C0A	-	-	√	0	65535	1	0	-	6.1.17
In 11	Cust. No. (High)	2C0B	-	-	√	0	65535	1	0	-	6.1.17
In 12	Cust. No. (Low)	2C0C	-	-	√	0	65535	1	0	-	6.1.17
In 13	QS No.	2C0D	-	-	√	0	255	1	0	-	6.1.17
In 15	REF Offset +	2C0F	-	-	√	-32767	32767	1	0	-	6.1.17
In 16	REF Offset -	2C10	-	-	√	-32767	32767	1	0	-	6.1.17
In 17	REF Gain +	2C11	-	-	√	0	32767	1	16384	-	6.1.17
In 18	REF Gain -	2C12	-	-	√	0	32767	1	16384	-	6.1.17
In 19	REF2 0-10V Offset	2C13	-	-	√	-32767	32767	1	0	-	6.1.17
In 20	REF2 0-10V Gain	2C14	-	-	√	0	32767	1	16384	-	6.1.17
In 21	REF2 0-20mA Offset	2C15	-	-	√	-32767	32767	1	0	-	6.1.17
In 22	REF2 0-20mA Gain	2C16	-	-	√	0	32767	1	16384	-	6.1.17
In 23	REF2 4-20mA Offset	2C17	-	-	√	-32767	32767	1	820	-	6.1.17
In 24	REF2 4-20mA Gain	2C18	-	-	√	0	32767	1	20480	-	6.1.17
In 40	Last Error	2C28	-	-	√	0	63	1	0	-	6.1.17
In 41	Error Counter OC	2C29	-	-	√	0	255	1	0	-	6.1.18
In 42	Error Counter OL	2C2A	-	-	√	0	255	1	0	-	6.1.18
In 43	Error Counter OP	2C2B	-	-	√	0	255	1	0	-	6.1.18
In 44	Error Counter OH	2C2C	-	-	√	0	255	1	0	-	6.1.18
In 45	Error Counter buS	2C2D	-	-	√	0	255	1	0	-	6.1.18
In 58	User Parameter 1	2C3A	-	-	√	0	32767	1	0	-	6.1.18
In 59	User Parameter 2	2C3B	-	-	√	0	32767	1	0	-	6.1.18
CP - Parameter		**Adr.**				min	max		default	**[?]**	**see Page(s)**
CP 0	Password Key / Bus	2600/2601									4.3.3; 4.4.3; 6.12.3
CP 1	User defined	3301									4.3.3; 6.12.4
CP 2	User defined	3302									4.3.3; 6.12.4
CP 3	User defined	3303									4.3.3; 6.12.4
CP 4	User defined	3304									4.3.3; 6.12.4
CP 5	User defined	3305									4.3.3; 6.12.4; 7.2.4
CP 6	User defined	3306									4.3.3; 6.12.4; 7.2.4
CP 7	User defined	3307									4.3.3; 6.12.4; 7.2.4
CP 8	User defined	3308									4.3.3; 6.12.4; 7.2.4
CP 9	User defined	3309									4.3.3; 6.12.4; 7.2.4
CP 10	User defined	330A									4.3.3; 6.12.4; 7.2.4
CP 11	User defined	330B									4.3.3; 6.12.4
CP 12	User defined	330C									4.3.3; 6.12.4
CP 13	User defined	330D									4.3.3; 6.12.4
CP 14	User defined	330E									4.3.3; 6.12.4
CP 15	User defined	330F									4.3.3; 6.12.4
CP 16	User defined	3310									4.3.3; 6.12.4
CP 17	User defined	3311									4.3.3; 6.12.4
CP 18	User defined	3312									4.3.3; 6.12.4
CP 19	User defined	3313									4.3.3; 6.12.4
CP 20	User defined	3314									4.3.3; 6.12.4
CP 21	User defined	3315									4.3.3; 6.12.4
CP 22	User defined	3316									4.3.3; 6.12.4
CP 23	User defined	3317									4.3.3; 6.12.4
CP 24	User defined	3318									4.3.3; 6.12.4

1. Introduction

2. Summary

3. Hardware

4. Operation

5. Parameter

6. Functions

7. Start-up

8. Special Operation

9. Error Assistance

10. Project Planning

11. Networks

12. Applications

13. Annex

6.1 Operating and Appliance Displays
6.2 Analog In- and Outputs
6.3 Digital In- and Outputs
6.4 Set Value and Ramp Adjustment
6.5 Voltage/Frequency (U/f) Characteristic
6.6 Motor Presetting
6.7 Keep on Running Functions
6.8 Parameter Sets
6.9 Special Functions
6.10 Encoder Interface
6.11 PI-Controller
6.12 CP-Parameter Definition

6.1.1 Summary of ru-Parameters 3
6.1.2 Summary of In-Parameters 3
6.1.3 Explanation to Parameter Description 4
6.1.4 Description of ru-Parameters 5
6.1.5 Description of In-Parameters 15

6. Functional Description

6.1 Operating and Appliance Displays

6.1.1 Summary of ru-Parameters

The parameter groups „ru“ and „In“ are described in this chapter. They serve for the operational monitoring, error analysis and evaluation as well as for the unit identification.
The ru- (run) parameter group represents the multimeter of the inverter. Here speeds, currents, voltages etc. are displayed which allow a conclusion on the operating condition of the drive. This can be especially helpful for the start-up of a plant or with regard to trouble shooting. Following parameters are available:

ru.	0	Inverter status
ru.	1	Actual speed display
ru.	3	Actual frequency display
ru.	4	Setpoint speed display
ru.	6	Setpoint frequency display
ru.	7	Actual load
ru.	8	Peak load
ru.	9	Apparent current
ru.	10	Active current
ru.	11	DC-link voltage
ru.	12	DC-link voltage /peak value
ru.	13	Output voltage
ru.	14	Input terminal status
ru.	15	Output terminal status
ru.	16	Internal input status
ru.	17	Internal output status
ru.	18	Active parameter set
ru.	22	Ref +/- display
ru.	23	Ref display
ru.	24	Display OL - counter
ru.	29	Heat sink temperature
ru.	30	Display PI-controller output
ru.	31	Operating hours-meter 1 (inverter connected to supply)
ru.	32	Operating hours meter 2 (inverter modulates)
ru.	33	Display counter A
ru.	34	Motorpoti - current value
ru.	41	Analog output 1 display
ru.	43	Programmable display
ru.	44	Operating frequency display
ru.	45	Display analog option
ru.	46	Ramp output frequency
ru.	47	Actual frequency encoder

6.1.2 Summary of In-Parameters

The In- (Information) parameter group includes data and information about the identification of the hardware and software as well as to the type and number of the errors that occurred. Following parameters are available:

In.	0	Inverter type
In.	1	Rated inverter current
In.	2	Maximum output frequency
In.	3	Maximum switching frequency
In.	4	Software - Identification
In.	5	Software date
In.	6	Config-File-No.
In.	7	Serial number (date)
In.	8	Serial number (counter)
In.	9	Serial number (Ackn.-No. High)
In.	10	Serial number (Ackn.-No. Low)
In.	11	Customer number (High)
In.	12	Customer number (Low)
In.	13	QS-Number
In.	15	REF Offset+
In.	16	REF Offset-
In.	17	REF Offset Gain+
In.	18	REF Offset Gain-
In.	19	REF2 0-10V Offset
In.	20	REF2 0-10V Gain
In.	21	REF2 0-20mA Offset
In.	22	REF2 0-20mA Gain
In.	23	REF2 4-20mA Offset
In.	24	REF2 4-20mA Gain
In.	40	Last error
In.	41	Error counter OC
In.	42	Error counter OL
In.	43	Error counter OP
In.	44	Error counter OH
In.	45	Error counter WD
In.	58	User Parameter 1
In.	59	User Parameter 2

6.1.3 Explanation to Parameter Description

For a better survey the parameters, described in the following section, receive a symbol line with following indications:

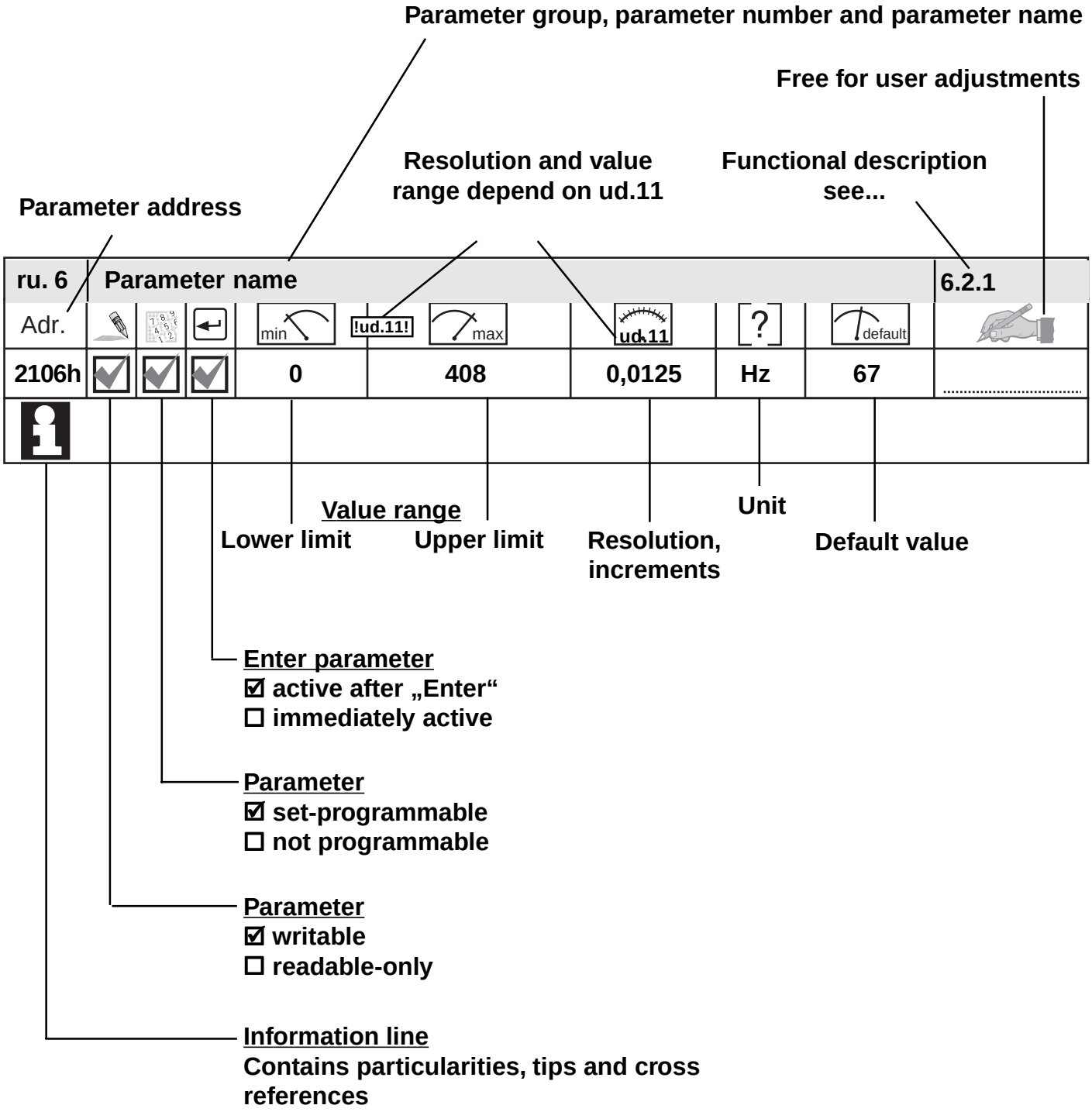

© KEB Antriebstechnik, 1999 All Rights reserved

6.1.4 Description of ru-Parameters

ru. 0	Inverter status								
Adr.				min	max		?	default	
2000h	☐	☐	☐	0	78	-	-	-	.....

The decimal values are written by bus!

The inverter status shows the current operating status of the inverter (e.g. forward constant run, standstill etc.). In case of error the current error message is displayed, even if the display has already been reset with ENTER (error-LED in the operator is still blinking). Further information on error messages like cause and remedy are described in Chapter 9 „Error Assistance“.

Display	Bus value ru.0 Erro code Pr.5	Meaning
noP noP.	0 0000h	**no** O**P**eration, control release not bridged, modulation disabled, output voltage = 0V, drive uncontrolled. The point in the display means, that the control of the inverter is done by the DRIVECOM profile parameters (ud.5 = 1 or 3). Inverter in the status „starting inhibited“.
E. OP	1 3210h	**E**rror **O**ver **P**otential (error: overvoltage); the DC-voltage in the DC-link has exceeded the permissible level.
E. UP	2 3220h	**E**rror **U**nder **P**otential (error: undervoltage); the DC-voltage in the DC-link has fallen below the permissible level.
E. OC	4 2200h	**E**rror **O**ver **C**urrent (Fehler: overcurrent); the output current has exceeded the permissilble peak current (see „Technical Data“).
E. OH	8 4210h	**E**rror **O**ver **H**eat (errror: overtemperature); the heat sink temperature has exceeded the permissible level. The error can be reset only after a waiting period.
E.dOH	9 4310h	**E**rror **d**rive **O**ver **H**eat (error: motor overheating); occurs when the motor temperature sensor/switch connected to the terminals OH/OH has tripped and the tripping delay E.dOH (Pn.16) is exceeded.
E.LSF	15 3230h	**E**rror **L**oad **S**hunt **F**ault (error load shunt relay); the relay for the bridging of the load current limiting resistor did not switch.
E. OL	16 1000h	**E**rror **O**ver **L**oad (error: overload); the inverter has been operated above its overload characteristic (see „Technical Data“). The error can be reset only after a cooling period, in this period the inverter must be supplied with voltage.
E.nOL	17 1000h	**E**rror **n**o **O**ver **L**oad (error: no more overload); the cooling period after error E.OL has elapsed. After a reset the unit is again ready for operation.
E.buS	18 8100h	**E**rror **buS** (bus error); for bus operation a monitoring time (watchdog time ud.8) can be adjusted. The error is triggered when no telegrams are received within the adjusted time.
E.OH2	30 1000h	**E**rror **O**ver **H**eat **2**; the electronic motor protective relay (Pn.3 = 3 or 4) has tripped.

© KEB Antriebstechnik, 1999
All Rights reserved

Display	Bus value ru.0 Error code Pr.5	Meaning
E. EF	31 9000h	**E**rror **E**xternal **F**ault (external error); is triggered, when a digital input is programmed as external error input (di. 3...di.10 = 6) and trips.
E.nOH	36 1000h	**E**rror **n**o **O**ver **H**eat (error: no overheating); inverter and motor overheating („E.OH“ or „E.dOH“) are not present. After reset ready for operation.
E.SEt	39 6300h	**E**rror **SEt** (set selection error); occurs when trying to select a locked parameter set.
E.PuC	49 6100h	**E**rror **P**ower **u**nit **C**ode invalid; (error: power section identification invalid) ; during the initialization phase the power section was not identified or detected as inadmissible.
PASS	50 -	This message is displayed after successfull copying of parameter sets.
E.co1 E.co2	54 - -	This message is displayed when there are overflows and inadmissible limitings. This error occurs, if in any section of the speed or frequency calculation the speed is > 9999 rpm or the frequency is > 409,6 / 819,2 Hz.
E. br	56 -	Braking control on (see chapter 6.9.6); occurs, if the load during a start is < minimum load level (Pn.58).
FAcc	64 -	**F**orward **Acc**eleration, (forward acceleration); drive is in the state of acceleration with direction of rotation forward (clockwise rotation).
FdEc	65 -	**F**orward **dEC**eleration, (forward deceleration); drive is in the state of deceleration with direction of rotation forward (clockwise rotation).
Fcon	66 -	**F**orward **con**stant, (constant run forward); drive has reached the adjusted frequency and runs constant forward (clockwise rotation).
rAcc	67	**r**everse **Acc**eleration, (reverse acceleration); drive is in the state of acceleration with direction of rotation reverse (counter-clockwise rotation).
rdEc	68 -	**r**everse **dEC**eleration, (reverse deceleration); drive is in the state of deceleration with direction of rotation reverse (counter-clockwise rotation).
rcon	69 -	**r**everse **con**stant, (constant run reverse); drive has reached the adjusted frequency and runs constant reverse (counter-clockwise rotation).
LS LS.	70 - -	**L**ow **S**peed; control release is switched but no direction of rotation is adjusted, i.e. modulation disabled; output voltage = 0V; drive uncontrolled. The point in the display means that the inverter is operated by way of the DRIVECOM profile parameters (ud.5 = 1 or 2). According to state diagram in condition „ready to start“ or „switched on“.
SLL	71 -	**S**ta**LL;** Stall function active; the stall function protects the inverter against overload during constant operation; the max. current is defined with (Pn.13).
LAS	72 -	**L**oad **A**cceleration **S**top - function active (acceleration stop); protects the inverter against overcurrent errors during the phase of acceleration (also refer to Pn.5).
LdS	73 -	**L**oad **d**eceleration **S**top - function active (deceleration stop); protects the inverter against overvoltage errors during deceleration (also refer to Pn.6).
SSF	74 -	**S**peed **S**earch **f**unction active; is displayed during the phase in which the inverter synchronises to a coasting motor (see Pn.7).

© KEB Antriebstechnik, 1999
All Rights reserved

Display	Bus value ru.0 Error code Pr.5	Meaning
dcb	75 -	**dc**-**b**rake active; is displayed during the deceleration of the motor by dc-current (see Pn.8…Pn.11).
bbL	76 -	**b**ase **bl**ock is active**,** e.g. the power module is blocked until the motor is de-excited.
dLS	77 -	like **LS** but after DC-braking
POFF	78 -	**P**ower **OFF** function active; occurs when in case of power failure the motor is brought to a controlled standstill (see Pn.17…Pn.41).
PLS	84 -	**L**ow **S**peed after **P**ower-off (power-off-function see chapter 6.9.3)
bon	85 -	Braking control, **B**rake **on** (see chapter 6.9.6)
boFF	86 -	Braking control, **B**rake **off** (see chapter 6.9.6)

ru. 1	Actual speed display								
Adr.				min	max		?	default	
2001h				-16384	16384	0,5	rpm	-	

The displayed value depends on cn.3.

cn.3 = 0 (default) The actual speed is calculated from the actual frequency and the adjusted dr-parameters. This calculated value corresponds to the synchronous speed, i.e. the slip occurring at the motor is not taken into account. For a correct speed indication it is necessary to enter the motor data in the dr-parameters.

cn.3 = 1 or 2 The current actual speed of the encoder interface (option) is displayed. The measured value corresponds to the real slip-afflicted actual speed.

A counter-clockwise rotating field (reverse) is represented by a negative sign. Precondition is the correct phase connection of the motor.

counter-clockwise rotation (reverse)

clockwise rotation (forward)

! For a closed-loop-controlled system it is imperative to ensure the correct phase connection, otherwise the controllers would run into their limit.

ru. 3	Actual frequency display								
Adr.				min	!ud.11! max	ud.11	?	default	
2003h				-409,58	409,58	0,0125	Hz	-	

The displayed actual frequency corresponds to the rotary field frequency at inverter output. A counter-clockwise rotating field (reverse) is represented by a negative sign. Precondition is the correct phase connection of the motor. With ud.10 the display can be standardized to a resolution of 0,1 Hz.

counter-clockwise rotation (reverse)

clockwise rotation (forward)

ru. 4	Setpoint speed display								
Adr.				min	max		?	default	
2004h				-16384	16384	0,5	rpm	-	

The setpoint speed is derived from the set frequency (ru.6) and the adjusted motor data (dr-parameters). For a correct speed indication it is therefore necessary to enter the motor data in the dr-parameters. A counter-clockwise rotating field (reverse) is represented by a negative sign (see ru.1). Precondition is the correct phase connection of the motor.

© KEB Antriebstechnik, 1999 All Rights reserved

ru. 6	Setpoint frequency display								
Adr.				min	!ud.11! max	ud.11	?	default	
2006h	☐	☐	☐	-409,58	409,58	0,0125	Hz	-	

Display of the current setpoint frequency. The display occurs as in ru.3. For control reasons the setpoint frequency is also indicated, when control release or direction of rotation are not actuated. If no direction of rotation is adjusted, the setpoint frequency for clockwise rotation (forward) is displayed.
With ud.10 the display can be changed to a resolution of 0,1 Hz.

ru. 7	Actual load								
Adr.				min	max		?	default	
2007h	☐	☐	☐	0	200	1	%	-	

Display of the actual load related to the rated current of the inverter. Only positive values are displayed, thus a differentiation between motoric and generatoric operation is not possible.

6

ru. 8	Peak load								
Adr.				min	max		?	default	
2008h	☑	☐	☐	0	200	1	%	-	

ru.8 allows the detection of short-time peak loads during an operating cycle. For that the highest detected value of ru.7 is stored in ru.8. The peak value memory is cleared by pressing the keys UP or DOWN or by bus by writing any chosen value to the address of ru.8. The disconnection of the inverter also results in a clearing of the memory.

ru.9	Apparent current								
Adr.				min	max		?	default	
2009h	☐	☐	☐	0	unit-dependent	0,1	A	-	

Display of actual apparent curent. The maximum values depend on the size of the inverter.

ru.10	Active current								
Adr.				min	max		?	default	
200Ah	☐	☐	☐	0	unit-dependent	0,1	A	-	

Display of the torque-forming active current (stator losses already deducted). Thus the display is nearly proportional to the supplied torque. Precondition is the input of the motor data in dr.1…dr.5. The maximum values depend on the size of the inverter.

ru.11	DC-link voltage								
Adr.				min	max		?	default	
200Bh	☐	☐	☐	200	999	1	V	-	.....

Display of actual DC-link voltage. Typical values are for
normal operation: 230V-class approx. 300-330V in case of fault (E.OP): 230V-class approx.390V
400V-class approx. 530-620V 400V-class approx.800V

ru.12	DC-link voltage peak value								
Adr.				min	max		?	default	
200Ch	☑	☐	☐	200	999	1	%	-	.....

ru.12 allows the detection of short-time voltage rises within an operating cycle. For that the highest detected value of ru.11 is stored in ru.12. The peak value memory is cleared by pressing the keys UP or DOWN or by bus by writing any chosen value to the address of ru.12. The disconnection of the inverter also results in a clearing of the memory.

ru.13	Output voltage								
Adr.				min	max		?	default	
200Dh	☐	☐	☐	0	999	1	V	-	.....

Display of actual output voltage

ru.14	Input terminal status								
Adr.				min	max		?	default	
200Eh	☐	☐	☐	0	255	1	-	-	.....

Display of the actual triggered digital inputs. Whether the input is inverted or the internal acceptance takes place through edge triggering or strobe is irrelevant for the display. According to following table a certain decimal value is given out for each digital input. If several inputs are triggered then the sum of their decimal values is displayed.

Bit -No.	Decimal value	Input	Terminal
0	1	ST (control release)	19
1	2	RST (Reset)	20
2	4	F (rotation forward)	10
3	8	R (rotation reverse)	11
4	16	I1 (prog. input 1)	4
5	32	I2 (prog. input 2)	5
6	64	I3 (prog. input 3)	6
7	128	I4 (prog. input 4)	7

© KEB Antriebstechnik, 1999
All Rights reserved

ru.15	Output terminal status								
Adr.				min	max		?	default	
200Fh	☐	☐	☐	0	255	1	-	-	.....

Display of the currently set external and internal digital outputs. Whether the outputs are set by inverting or real is irrelevant for the display. According to following table a certain decimal value is given out for each digital output. If several outputs are set then the sum of their decimal values is displayed.

Bit -No.	Decimal value	Output	Terminal
0	1	Out 1 (transistor output)	12
1	2	Out 2 (relay RLA,RLB,RLC)	1 , 2 , 3
2	4	Out 3 (relay FLA,FLB,FLC)	21 , 22 , 23
4	16	Out A (internal output A)	none
5	32	Out B (internal output B)	none
6	64	Out C (internal output C)	none
7	128	Out D (internal output D)	none

ru.16	Internal input status								
Adr.				min	max		?	default	
2010h	☐	☐	☐	0	4095	1	-	-	.....

Display of the currently set external and internal digital inputs. The input is considered as set when it is available as active signal for further processing (i.e. acceptance by strobe, edge triggering or logic operation). According to following table a certain decimal value is given out for each digital input. If several inputs are set then the sum of their decimal values is displayed.

Bit -No.	Decimal value	Input	Terminal
0	1	ST (control release)	19
1	2	RST (reset)	20
2	4	F (rotation forward)	10
3	8	R (rotation reverse)	11
4	16	I1 (prog. input 1)	4
5	32	I2 (prog. input 2)	5
6	64	I3 (prog. input 3)	6
7	128	I4 (prog. input 4)	7
8	256	IA (internal input A)	none
9	512	IB (internal input B)	none
10	1024	IC (internal input C)	none
11	2048	ID (internal input D)	none

© KEB Antriebstechnik, 1999
All Rights reserved

ru.17	Internal output status								
Adr.				min	max		?	default	
2011h				0	15	1	-	-	.....

With parameters do.1…do.4 switching conditions can be selected which serve as basis for the setting of the outputs. This parameter indicates which of the selected switching conditions are met, before they are linked by the programmable logic or inverted. According to following table a certain decimal value is given out for the parameters do.1…do.4. If several of the switching conditions selected with these parameters are met, then the sum of the decimal values is displayed.

Bit -No.	Decimal value	Output
0	1	switching condition 1 (do.1)
1	2	switching condition 2 (do.2)
2	4	switching condition 3 (do.3)
3	8	switching condition 4 (do.4)

ru.18	Active parameter set								
Adr.				min	max		?	default	
2012h				0	7	1	-	-	.....

The frequency inverter F4-C can fall back on 8 internal parameter sets (0-7). Through corresponding programming the inverter can independently change parameter sets and is thus able to drive different operating modes. This parameter shows the parameter set, with which the inverter is currently running and which can be edited by keyboard. Independent of it another parameter set can be edited by bus.

ru.22	REF +/- display (terminal X1.8 and X1.9)								
Adr.				min	max		?	default	
2016h				-100	100	0,1	%	-	.....

This parameters displays the percentual value of the signal at the analog input REF+/REF- (terminal X1.8/X1.9).
-10V...0...+10V = -100%...0...100%

ru.23	REF display (terminal X1.17)								
Adr.				min	max		?	default	
2017h				-100	100	0,1	%	-	.....

This parameter displays the percentual value of the signal at the analog input REF (terminal X1.17). 100 % relate to the final value of the signal source selected with An.6.
Example: 0...20mA = 0...100% or 4...20mA = 0...100% or 0...10V = 0...100%

© KEB Antriebstechnik, 1999
All Rights reserved

ru.24	Display OL - counter								
Adr.				min	max		?	default	
2018h	☐	☐	☐	0	100	1	%	-	.....

To prevent „E.OL“ errors caused by too high loads (load reduction), the internal counter content of the OL-counter can be made visible. At 100 % the inverter switches off with the error „E.OL“. The error can be reset only after a cooling time (blinking display „E.nOL“).

ru.29	Heat sink temperature								
Adr.				min	max		?	default	
201Dh	☐	☐	☐	0	100	1	°C	-	.....

ru.29 displays the current heat sink temperature of the inverter. Below 20°C noF (no Function) is displayed.

ru.30	Display PI-controller output								
Adr.				min	max		?	default	
201Eh	☐	☐	☐	-100	100	0,1	%	-	.....

A universal PI-controller is integrated into the inverter. It can be used externally as well as internally. So that the controller is independent as much as possible, the indicated manipulated variable is given out in percentage in relation to a +/- 10V signal.

ru.31	Operating hours-meter 1								
Adr.				min	max		?	default	
201Fh	☐	☐	☐	0	65535	1	h	-	.....

The operating hours-meter 1 displays the time the inverter has been switched on. The indicated value includes all operating phases. On attaining the maximum value (approx. 7.5 years) the display remains on the maximum value.

ru.32	Operating hours-meter 2								
Adr.				min	max		?	default	
2020h	☐	☐	☐	0	65535	1	h	-	.....

The operating hours-meter 2 displays the time the inverter has been active (motor controlled). On attaining the maximum value (approx. 7.5 years) the display remains on the maximum value.

© KEB Antriebstechnik, 1999
All Rights reserved

ru.33	Display counter A								
Adr.				min	max		?	default	
2021h	☑	☐	☐	0	327,67	0,01	s / h	-	

The counter content of the free-to-program counter A is displayed, alternatively in seconds or hours (see LE.47). The counter can be adjusted to any chosen value by means of keyboard or bus. The programming of the counter is done with the parameters LE.41…LE.47.

ru.34	Motorpoti - current value								
Adr.				min	max		?	default	
2022h	☑	☑	☐	-100	100	0,01	%	0	

The motor-poti function in the KEB COMBIVERT simulates a mechanic, motor-driven potentiometer. The triggering is done over 2 programmable inputs („Poti up“ and „Poti down“). The display (-100…100%) relates to the fixed limits (oP.4…oP.7). In addition to the inputs the motor-poti can also be triggered with the keys „UP“ and „DOWN“. By bus the motor-poti can be set to any chosen value between -100…100%. The adjustment of the motor-poti is done with the parameters oP.26…oP.29.

ru.41	Analog output 1 display (terminal X1.15)								
Adr.				min	max		?	default	
2029h	☐	☐	☐	0	100	0,1	%	-	

This parameter shows the percentual value of the output signal at the analog output AOUT (terminal X1.15). An output signal of 0…10V corresponds to 0…100%.

ru.43	Programmable display								
Adr.				min	max		?	default	
202Bh	☐	☐	☐	-32767	32767	-	-	-	

Contrary to the fixed defined indications, this display is free for own definitions. Thus a customer-specific value (e.g. bottles/min) can be displayed. The definition is done with ud.87…ud.91.

ru.44	Carrier frequency display								
Adr.				min	max		?	default	
202Ch	☐	☐	☐	1	16	1	kHz	-	

Displays the current operating frequency of the inverter.

© KEB Antriebstechnik, 1999
All Rights reserved

ru.45	Display analog option								
Adr.				min	max		?	default	
202Dh				-100	100	0,1	%	-	

This parameter displays the percentual value of the signal at the optional analog input.
-10V...0...+10V = -100%...0...100%

ru.46	Ramp output frequency								
Adr.				min	!ud.11! max	ud.11	?	default	
202Eh				-409,58	409,58	0,0125	Hz	-	

This parameter displays the frequency at the output of the ramp generator. If the internal PI-controller is not active, the displayed frequency corresponds to the output frequency ru.3.

6

ru.47	Actual frequency encoder								
Adr.				min	!ud.11! max	ud.11	?	default	
202Fh				-409,58	409,58	0,0125	Hz	-	

The displayed value depends on cn.3.

cn.3 = 0 (default) The actual frequency of ru.3 is displayed.

cn.3 = 1 or 2 The current actual frequency of the encoder interface (option) is displayed. This measured value corresponds to the real slip-afflicted actual speed.
1: channel 1
2: channel 2

A counter-clockwise rotating field (reverse) is represented by a negative sign. Precondition is the correct phase connection of the motor.

! For a closed-loop-controlled system it is imperative to ensure the correct correct phase connection, otherwise the controllers would run into their limit.

6.1.5 Description of In-Parameters

In. 0	Inverter type								
Adr.				min	max		?	default	
2C00h				-	-	1	hex	-	.....

The inverter type is indicated in hexadecimal numbers. The bits have following meaning:

bit 0:	Voltage class	0 = 200V 1 = 400V
bit 1-5	Unit size	05,07,09,....
bit 6-9	Control type	0 = 0A.F4 (F4-C / up to housing size E) 1 = 0B.F4 (F4-S / up to housing size E) 2 = 00.F4 (F4-C / from housing size G upwards)
bit 10-12	Rated operating frequency	0 = 2kHz 1 = 4kHz 2 = 6kHz 3 = 8kHz 4 = 10kHz 5 = 12kHz 6 = 14kHz 7 = 16kHz
bit 13-15	Maximal operating frequency	0 = 2kHz 1 = 4kHz 2 = 6kHz 3 = 8kHz 4 = 10kHz 5 = 12kHz 6 = 14kHz 7 = 16kHz

Example:

hex	F				C				9				D			
binary	1	1	1	1	1	1	0	0	1	0	0	1	1	1	0	1
decimal	7				7				2				14			1

=> 14.F4.C 16 / 16kHz 400V

In. 1	Rated inverter current								
Adr.				min	max		?	default	
2C01h				0	460	0,1	A	LTK	.....

Display of rated inverter current in A. The value is determined from the power circuit identification (LTK) and cannot be changed.

© KEB Antriebstechnik, 1999
All Rights reserved

In. 2	Max. output frequency								
Adr.				min	max		?	default	
2C02h	☐	☐	☐	0	409,5875	0,0125	Hz	409,5875	.....

Display of the maximum possible output frequency in Hz for this inverter. The value range and the resolution depend on ud.11.

In. 3	Max. carrier frequency								
Adr.				min	max		?	default	
2C03h	☐	☐	☐	1	LTK	1	kHz	LTK	.....

Display of the maximum possible carrier frequency in kHz for this inverter. The default and maximum values depend on the power circuit identification (LTK).

In. 4	Software identification								
Adr.				min	max		?	default	
2C04h	☐	☐	☐	0	9999	1	-	-	.....

This parameter contains the code for the software version number and the control hardware.

1st digit:	Control hardware (0 = 00.F4, A = 0A.F4, D = 0D.F4)
2nd and 3rd digit:	Software version (e.g. 11 = 1.1)
4th digit:	Special version (0 = Standard)

In. 5	Software date								
Adr.				min	max		?	default	
2C05h	☐	☐	☐	-	-	0,1	-	-	.....

Display of the software date. It contains day, month and year, however only the last number of the year is displayed.

Example:	Display	= 1507.8
	date	= 15.07.98 / 15th July 1998

In. 6	Config-file number								
Adr.				min	max		?	default	
2C06h	☐	☐	☐	Software	Software	1	-	-	.....

This parameter serves for the identification of the software used in the control through KEB COMBIVIS. The configuration takes place automatically at the call of COMBIVIS and connected inverter.

© KEB Antriebstechnik, 1999
All Rights reserved

In. 7	Serial number / date				2C07h			
In. 8	Serial number / counter				2C08h			
In. 9	Serial number / Ackn.-No. high				2C09h			
In.10	Serial number / Ackn.-No. low				2C0Ah			
In.11	Customer number / high				2C0Bh			
In.12	Customer number / low				2C0Ch			
In.13	QS-number				2C0Dh			
Adr.				min	max		?	default
s.above				0	65535	1	-	0

The serial number and the customer number identify the inverter. The QS-number contains internal production information.

In.15	REF Offset+				2C0Fh			0
In.16	REF Offset-				2C10h			0
In.17	REF Gain+				2C11h			16384
In.18	REF Gain-				2C12h			16384
In.19	REF2 / 0...10V Offset				2C13h			0
In.20	REF2 / 0...10V Gain				2C14h			16384
In.21	REF2 / 0...20mA Offset				2C15h			0
In.22	REF2 / 0...20mA Gain				2C16h			16384
In.23	REF2 / 4...20mA Offset				2C17h			820
In.24	REF2 / 4...20mA Gain				2C18h			20480
Adr.				min	max		?	default
s.above				-32767 (0)	32767	1	-	s.o.

These parameters display the result of the automatic adjustment of the analog inputs and are intended for the service technicians.

In.40	Last error							
Adr.				min	max		?	default
2C28h				0	63	1	-	-

In.40 displays the last error that occurred, E.UP is not stored. You find a description of the error messages at parameter ru.0.

© KEB Antriebstechnik, 1999
All Rights reserved

In.41	**Error counter OC**				**2C29h**				
In.42	**Error counter OL**				**2C2Ah**				
In.43	**Error counter OP**				**2C2Bh**				
In.44	**Error counter OH**				**2C2Ch**				
In.45	**Error counter buS**				**2C2Dh**				
Adr.				min	max		?	default	
s.above	☐	☐	☐	**0**	**255**	**1**	**-**	**0**	.....

The error counters (for E.OC, E.OL, E.OP, E.OH, E.buS) indicate the total numbers of errors that occurred for each type of error. The maximum number is 255.

In.58	**User Parameter 1**								
Adr.				min	max		?	default	
2C3Ah	☐	☐	☐	**0**	**32767**	**1**	**-**	**0**	.....

This Parameter has no function and is for free using by the constructor.

In.59	**User Parameter 2**								
Adr.				min	max		?	default	
2C3Bh	☐	☐	☐	**0**	**32767**	**1**	**-**	**0**	.....

This Parameter has no function and is for free using by the constructor.

1. Introduction

2. Summary

3. Hardware

4. Operation

5. Parameter

6. Functions

7. Start-up

8. Special Operation

9. Error Assistance

10. Project Planning

11. Networks

12. Applications

13. Annex

6.1 Operating and Appliance displays

6.2 Analog In- and Outputs

6.3 Digital In- and Outputs

6.4 Set Value and Ramp Adjustment

6.5 Voltage/Frequency (U/f) Characteristic

6.6 Motor Presetting

6.7 Keep on Running Functions

6.8 Parameter Sets

6.9 Special Functions

6.10 Encoder Interface

6.11 PI-Controller

6.12 CP-Parameter definition

6.2.1 Short Description of the Analog Inputs 3
6.2.2 Input Signals 4
6.2.3 Noise Filter 4
6.2.4 Buffer Memory 5
6.2.5 Input Characteristics Amplifier 6
6.2.6 Zero Clamp Speed 7
6.2.7 Selection of Setpoint Value-/ Aux Input 7
6.2.8 Simulation Analog Option with ±REF 7
6.2.9 Switch over Display Parameter 8
6.2.10 Short Description Analog Output 9
6.2.11 Output Signals 9
6.2.12 Output Characteristics Amplifier 9
6.2.13 Used Parameters 10

6.2 Analog In- and Outputs

6.2.1 Short Description Analog Inputs

The KEB COMBIVERT has three analog inputs.

±REF - external differential voltage input with high internal resistance
REF - external multifunction input of current and voltage signals
Option - internal input, used for optional hardware

After selection of the input signal at the REF-input the analog inputs will be smoothed by an electronic filter with mean-value generation. In case of factory setting the smoothed signals are now available to the characteristics amplifier. For special applications a buffer memory can be activated, storing the last signals received before the failure. With the characteristics amplifier x-and y offset and gain of the input signals can be changed. To avoid voltage fluctuations and ripple voltages around the zero point, the analog signal can be faded out up to 10% around the zero point. At the output of the block diagram An.12 determines which analog signal shall serve as reference or as aux-value. With An.22 the buffer memory can be adjusted, the display parameters (ru.22, ru.23, ru.45) can be switched over and the analog option can be switched to ±REF-simulation. The limit of the internal values is ±400%.

6

Picture 6.2.1 Principle of analog inputs

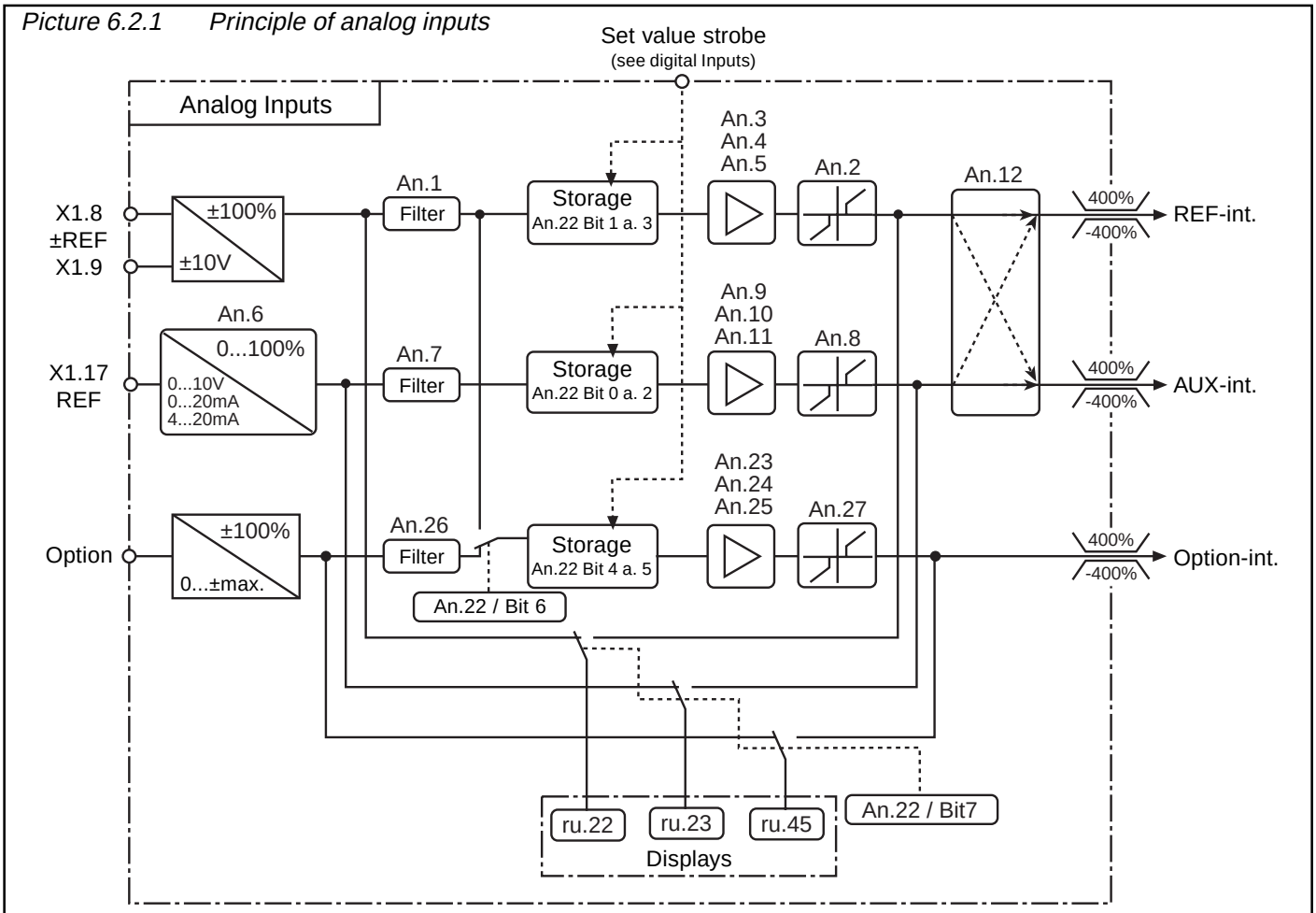

6.2.2 Input Signals (An.6)

Internally the input signals are given in percentual values. The differential voltage input (±REF) supplies internal a percentual value ±100%. According to the selected input signal (0...10V; 0...20mA; 4...20mA) the multifunction input supplies a value between 0...100%.

Differential Voltage Input: (±REF)

Terminal X1.8 and X1.9
Resolution ±10 Bit

Max load of output CRF Kl. X1.16 6mA

Picture 6.2.2.a Differential voltage input 0...±10V DC

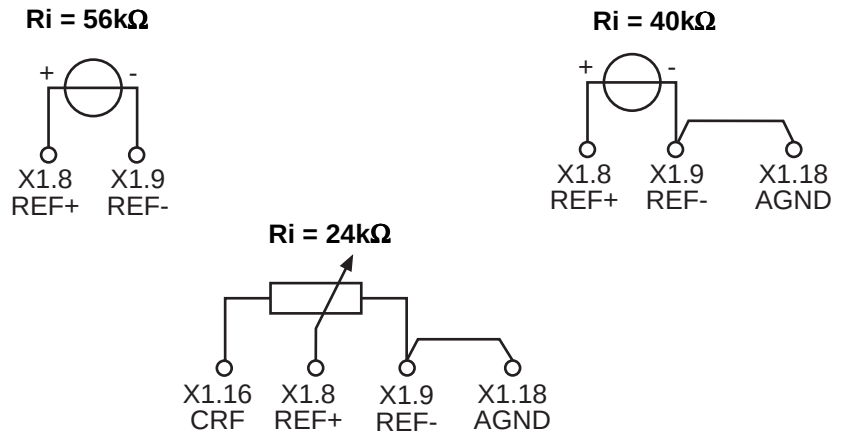

Multifunction Input: (REF)

Terminal X1.17
Resolution 10 Bit

Picture 6.2.2.b Multifunction input 0...10V, 0...20mA, 4...20mA

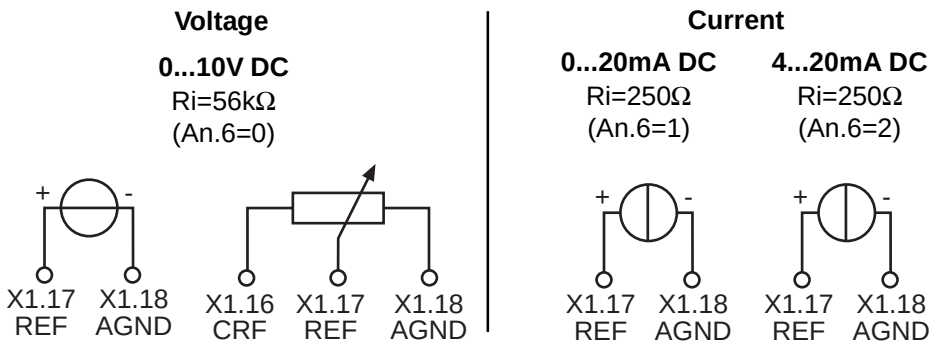

Optional Analog Input

The opitional analog input is not put on the terminal strip. It is used internally with additional cards (for example the encoder interface)

6.2.3 Noise Filter (An.1, An.7, An.26)

The noise filter shall suppress disturbances and ripples from the input signals.When the noise filter is switched off, the analog inputs are scanned all 4ms and this actual value is transmitted. With the noise filter it is adjustable that the inputs are tested 2-, 4-, 8- or 16-times. From this value an average value is built which is transmitted afterwards.

An.1, An.7, An.26	Function
0	No average value generation (updating time 4 ms)
1	Average value generation from 2 values (updating time 8 ms)
2	Average value generation from 4 values (updating time 16 ms)
3	Average value generation from 8 values (updating time 32 ms)
4	Average value generation from 16 values (updating time 64 ms)

© KEB Antriebstechnik, 1997
All Rights reserved

6.2.4 Buffer Memory (An.22)

In order to control various inverters with different frequencies via the analog output of a PLC, an analog memory was implemented. It is adjustable with parameter An.22 and controlled with a programmable digital input.

For a better understanding, a short example follows:
Five inverters (each operating one conveyor) shall be controlled by a PLC with analog setpoint values. Due to different values, a parallel control is out of question; for cost reasons, the same is true for a PLC with five analog outputs.
Generally there are enough digital outputs at the PLC and we use them for releasing the analog input of the inverter. (like a CS-signal in the digital technic) The analog inputs will parallely be switched to an analog output at the PLC. If the CS-signal is set, the inverter operates with the actual value. If the CS-signal is switched off, the inverter operates with the analog value, which was applied up to this point of time. In this way, e.g. all inverters together can be started up. If the first inverter has reached his setpoint value, the CS-signal is switched off for this inverter. If the next inverter has reached his setpoint value, the CS-signal also will be switched off (and so on). Depending on the specific kind of operation, it is also possible to set each inverter to the setpoint value seperately.

Picture 6.2.4 Principle of buffer memory

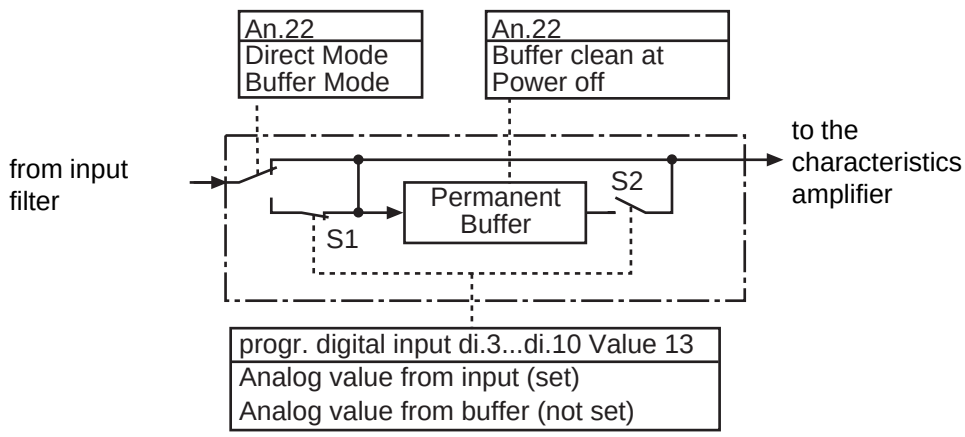

Coming from the input filter, the memory mode can be switched on with An. 22. If the programmable digital input will be set now (S1 closed;S2 open) the analog signal will directly be transmitted and parallely stored in the non-volatile memory. As soon as the digital input will be switched off (S1 open; S2 closed), the inverter will continue to operate with the value stored in the memory. In addition it can be determined with An.22 whether the storage contents shall be conserved or cancelled
.

An.22 Analog-In-Mode

The sum of all „on“ values has to be entered in An.22

An.22			Function
0 = off	1	= on	Memory mode for REF
0 = off	2	= on	Memory mode for ±REF
0 = off	4	= on	Delete REF-memory when switching off
0 = off	8	= on	Delete ±REF-memory when switching off
0 = off	16	= on	memory mode for analog option
0 = off	32	= on	Delete memory for analog option when switching off
0 = off	64	= on	Simulation of analog Option by ±REF (s. picture 6.2.1)
0 = off	128	= on	Displays after input amplifier (s. picture 6.2.1)

6.2.5 Input characteristics Amplifier (An.3...5, An.9...11, An.23...25)

You can see in picture 6.2.1 the characteristics amplifiers are the next to the buffer memory. With these parameters the input signals can be adjusted with a x- and y-offset and also a gain. No offset is adjusted with factory setting. The gain is 1, i.e. the input value is equivalent to the output value (see picture 6.2.5.a). The output value depends on the following formula:

Out = Gain (In - Offset X) + Offset Y

Picture 6.2.5.a Factory setting: no Offset, Gain 1

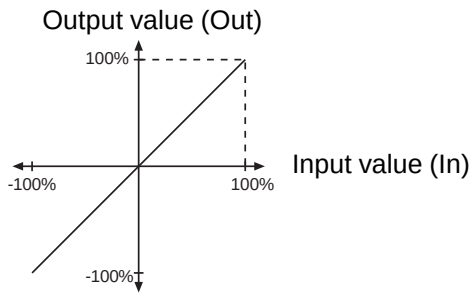

Input	±REF	REF	Option	Range of Values	Resolution	Standard Value
Gain	An.3	An.9	An.23	-20...20	0,01	1,00
X-Offset	An.4	An.10	An.24	-100...100	0,1	0
Y-Offset	An.5	An.11	An.25	-100...100	0,1	0

With these examples we want to show you the possibilities of these functions. In accordance with picture 6.2.5.b

1. set the X-Offset for the input REF at 50 (%)
2. set the Gain at 2 (-times amplification)

Picture 6.2.5.b X-Offset (An.10)=50%; Gain (An.9)=2.00

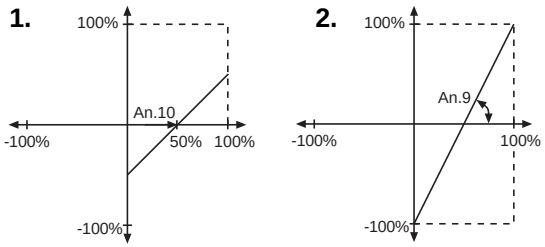

With these adjustments the whole speed range can be driven via the input REF. (direction of rotation = ±analog)

0%	In corresponds to	-100% Out
50%	In corresponds to	0% Out
100%	In corresponds to	100% Out

In accordance with picture 6.2.5.c

1. set the X-Offset for the input REF to 75 (%)
2. set the Y-Offset for the input REF to 100 (%)
2. set the Gain to -1(-times amplification)

Picture 6.2.5.c X-Offset (An.10)=75%; Y-Offset (An.11)= 100%; Gain (An.9)= -1.00

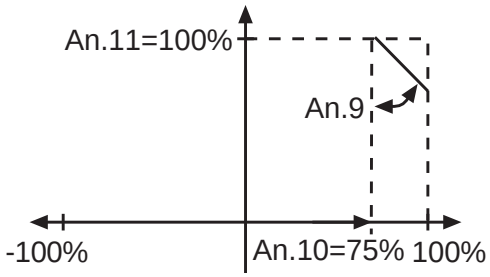

© KEB Antriebstechnik, 1997
All Rights reserved

6.2.6 Zero Clamp Speed (An.2 /An.8 / An.27)

With capacitive and inductive interferences on the input lines or voltage fluctuations of the signal source, it is possible that the motor, connected to the inverter, trembles at a standstill in spite of analog input filter. To suppress this is the assignment of the zero clamp speed.
With the parameters An.2, An.8, and An.27 the respective analog signals **at the output of the characteristics amplifier** can be faded out in an area between 0...10%. The adjusted value is valid for both rotation directions.
If a negative percentage is adjusted, the hysteresis acts additional to the zero point even around the actual setpoint value. Setpoint value changes at constant operation are taken over, when the value is larger than the adjusted hysteresis.

6.2.6 Zero clamp speed

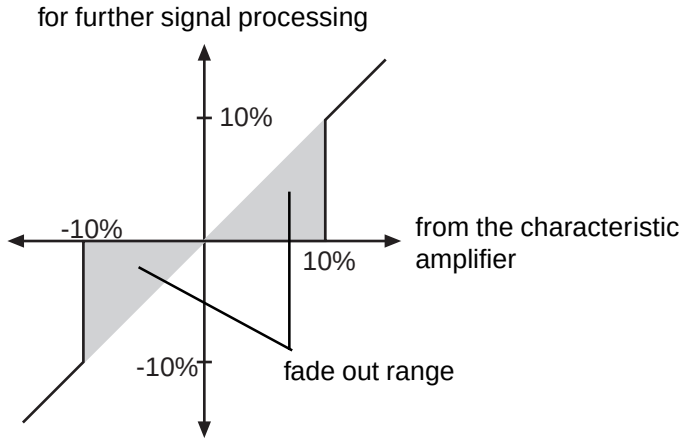

Range of Values

Input	Parameter	Value Range	Resolution	Standard Value
±REF REF Option	An.2 An.8 An.27	-10...10%	0,1%	0,2%

6.2.7 Selection Set-point Value/ Aux Input (An.12)

The control includes internally two analog channels (REF-internal and AUX-internal). With „parameter“ An.12 the two external analog inputs ±REF and REF can be assigned alternatively to both of the internal analog channels.

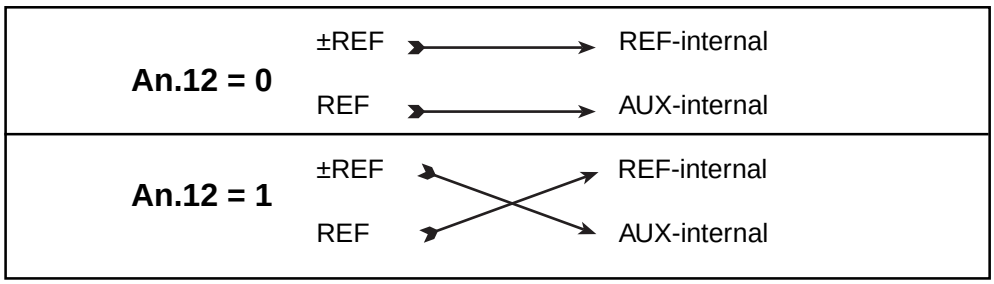

6.2.8 Simulate Analog Option with ±REF (An.22 Bit 6)

In order to activate this function set bit 6 (value 64) of parameter An.22 (see chapter 6.2.4 at the bottom of page 5). When this bit is set, the analog setpoint value from ±REF is fed simultaneously into the option channel. You can find the further signal processing of the option channel at the encoder interface.

© KEB Antriebstechnik, 1997
All Rights reserved

6.2.9 Change Display Parameter (An.22 Bit 7)

We have seen in this chapter, the original analog signal can be effected, that the function is different at the end. With changing the displays you can describe the input (standard) or the output of the analog signal processing. For this case bit 7 (value 128) must be set in parameter An. 22. (see chapter 6.2.4 at the bottom).
In our example from chapter 6.2.5. with 0...10V the display would show 0...100% at the input and -100...100% at the output.

6.2.10 Short Description Analog Output

The KEB COMBIVERT has a programmable analog output (AOUT). Different values can be selected with parameter An.14 which is then given on output X1.15. ru.41 displays the selected value. With the characteristics amplifier (An.15, An.16, An.17) the analog signal can be adjusted according to the requirements.

Picture 6.2.10 Principle of the analog output

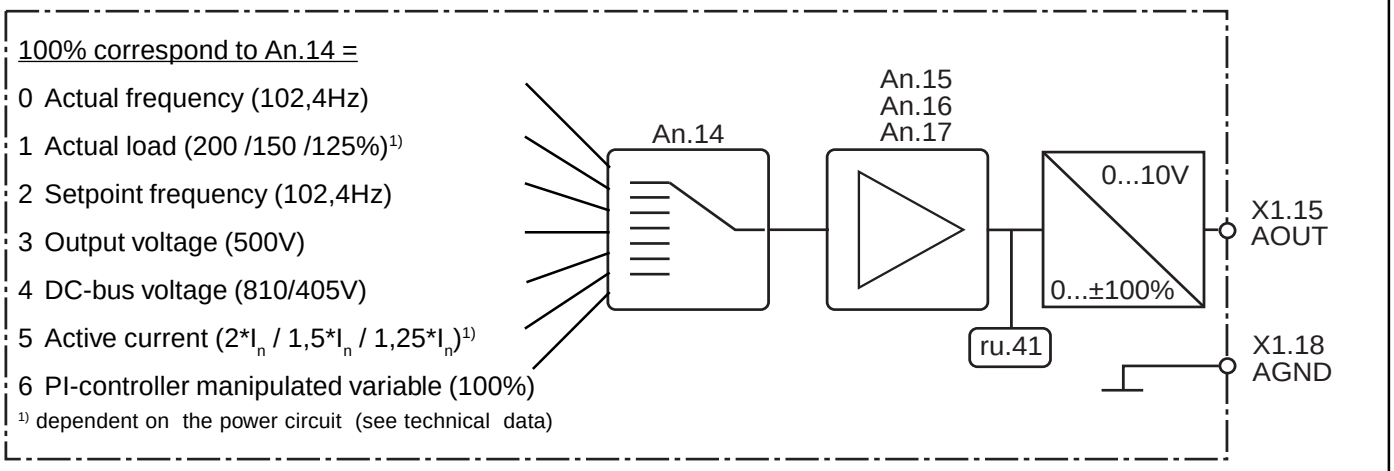

6.2.11 Output Signals

A voltage between 0...10V DC corresponds to 0...±100% with a resolution of 9 Bit of the selected value. 100% correspond to the bracket values in picture 6.2.10

Picture 6.2.11 Analog output

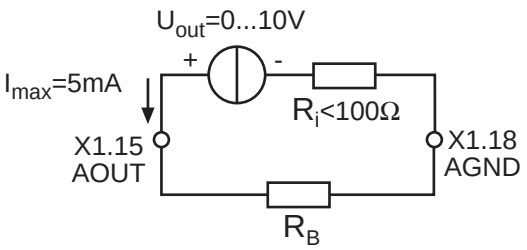

© KEB Antriebstechnik, 1997
All Rights reserved

6.2.12 Output characteristics amplifier (An.15, An.16, An.17)

After selection of the output signal there is a characteristics amplifier (see picture 6.2.10). With these parameters the output signal can be adjusted with a x-and y-offset and also a gain. No offset is adjusted with factory setting. The gain is 1, i.e. 100% of the output values are equivalent with the 10V at the analog output (see picture 6.2.12.a).

Function	Parameter	Value Range	Resolution	Standard Value
Gain	An.15	-20...20	0,01	1,00
X-Offset	An.16	-100...100	0,1	0
Y-Offset	An.17	-100...100	0,1	0

Picture 6.2.12.a factory setting: no Offset, Gain 1

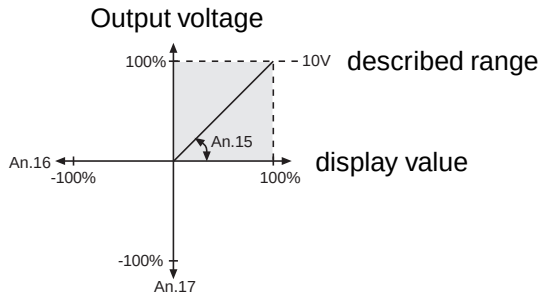

Inverting of the analog output

See an example in picture 6.2.12.b, how to use the characteristics amplifier

1. set the X-Offset (An.16) at 100 (%)
2. set the Gain (An.15) at -1.00 (-times amplification)

Picture 6.2.12.b Inverting of the analog output

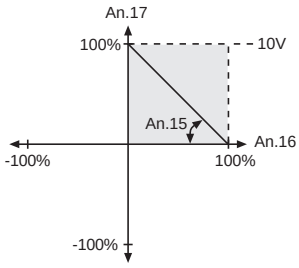

With these adjustments an invertation of the analog signal is made.

0% correspond to 10V at the output
100% correspond to 0V at the output

Analog output as switch

See an example in picture 6.2.12.c how to use the analog output as 0/10V-switch

1. set the Gain (An.15) at 20.00 (-times amplification)
2. set the X-Offset (An.16) to the requested switch level

Picture 6.2.12.c Analog output as switch

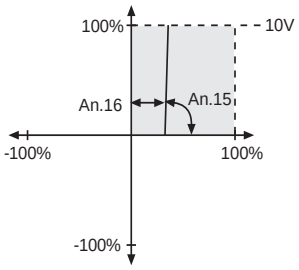

Because of the high amplification the analog output is switching in a small window

© KEB Antriebstechnik, 1997
All Rights reserved

Calculation of the gain

The analog output operates strictly under the in picture 6.2.10.a given values, the characteristic can be adjusted with the gain so that the complete range from 0...10V is used.

$$\text{Gain (An.15)} = \frac{\text{given value}}{\text{requested value}}$$

Example output frequency

$$\frac{100\text{Hz}}{68\text{Hz}} = 1{,}47$$

6.2.13 Used Parameters

Param.	Adr.	R/W	PROG.	ENTER	min	max	Step	default	
ru.22	2016h	-	-	-	-100,0 %	100,0 %	0,1 %	0 %	-
ru.23	2017h	-	-	-	-100,0 %	100,0 %	0,1 %	0 %	-
ru.41	2029h	-	-	-	-100,0 %	100,0 %	0,1 %	0 %	-
ru.45	202Dh	-	-	-	-100,0 %	100,0 %	0,1 %	0 %	-
An.1	2801h	✔	-	-	0	4	1	0	-
An.2	2802h	✔	-	-	-10 %	10 %	0,1 %	0,2 %	-
An.3	2803h	✔	-	-	-20,00	20,00	0,01	1,00	-
An.4	2804h	✔	-	-	-100 %	100 %	0,1 %	0,0 %	-
An.5	2805h	✔	-	-	-100 %	100 %	0,1 %	0,0 %	-
An.6	2806h	✔	-	✔	0	2	1	0	-
An.7	2807h	✔	-	-	0	4	1	0	-
An.8	2808h	✔	-	-	-10 %	10 %	0,1 %	0,2 %	-
An.9	2809h	✔	-	-	-20,00	20,00	0,01	1,00	-
An.10	280Ah	✔	-	-	-100 %	100 %	0,1 %	0,0 %	-
An.11	280Bh	✔	-	-	-100 %	100 %	0,1 %	0,0 %	-
An.12	280Ch	✔	✔	✔	0	1	1	0	-
An.14	280Eh	✔	✔	-	0	6	1	0	-
An.15	280Fh	✔	✔	-	-20,00	20,00	0,01	1,00	-
An.16	2810h	✔	✔	-	-100 %	100 %	0,1 %	0,0 %	-
An.17	2811h	✔	✔	-	-100 %	100 %	0,1 %	0,0 %	-
An.22	2816h	✔	-	✔	0	255	1	0	bit coded
An.23	2817h	✔	-	-	-20,00	20,00	0,01	1,00	-
An.24	2818h	✔	-	-	-100	100 %	0,1 %	0,0 %	-
An.25	2819h	✔	-	-	-100	100 %	0,1 %	0,0 %	-
An.26	281Ah	✔	-	-	0	4	1	0	-
An.27	281Bh	✔	-	-	-10 %	10 %	0,1 %	0,2 %	-

© KEB Antriebstechnik, 1997
All Rights reserved

1. Introduction

2. Summary

3. Hardware

4. Operation

5. Parameter

6. Functions

7. Start-up

8. Special Operation

9. Error Assistance

10. Project Planning

11. Networks

12. Applications

13. Annex

6.1 Operating and Appliance displays

6.2 Analog In- and Outputs

6.3 Digital In- and Outputs

6.4 Set Value and Ramp Adjustment

6.5 Voltage/Frequency (U/f) Characteristic

6.6 Motor Presetting

6.7 Keep on Running Functions

6.8 Parameter Sets

6.9 Special Functions

6.10 Encoder Interface

6.11 PI-Controller

6.12 CP-Parameter definition

6.3.1 Short Description Digital Inputs 3
6.3.2 Input Signals 3
6.3.3 Terminal Status 4
6.3.4 Set Digital Inputs with Software 5
6.3.5 Digital Filter 6
6.3.6 Inverting of the Inputs 7
6.3.7 Edge Triggering 7
6.3.8 Strobe-Dependent Inputs 7
6.3.9 Mode rotation setting 8
6.3.10 Function Assignment 9
6.3.11 Input State 9
6.3.12 Short Description Digital Outputs 9
6.3.13 Output Signals 10
6.3.14 Output Conditions 10
6.3.15 Inverting output conditions ... 12
6.3.16 Selection output Conditions . 12
6.3.17 Output Condition Interconnection 12
6.3.18 Inverting of the Outputs 13
6.3.19 Output terminal state 13
6.3.20 Used Parameters 13

6.3 Digital In- and Outputs

6.3.1 Short Description Digital Inputs

! For safety reasons the control release (ST) must generally be operated by hardware. Edge triggering and strobe signal can be adjusted, but they have no influence.

Der KEB COMBIVERT has 8 external digital inputs. Four of them are programmable (I1...I4). Additionally the KEB COMBIVERT has four internal digital inputs (IA...ID) They are directly connected with the internal outputs.
Coming from the terminal strip, parameter dr.1 defines PNP-or NPN input logic.. Parameter ru.14 shows the actual active terminals. Every input can be set via the terminal strip (di.15) or by software with di.16. A digital filter (di.0) reduces the interference susceptibility of the inputs. With di.2 the inputs can be inverted, or with di.14 the inputs can be set on edge triggering. A strobe mode can be activated with parameters di.17...di.19. The input status (ru.16) indicates the inputs that are actually set for processing. The inputs forward (F) and revers (R) can be changed to run/ stop and forward/revers with di.20. The function of a programmable input is defined with di.3...di.6. The internal inputs are directly controlled by the internal outputs. Their function is defined with di.7...di.10.

Picture 6.3.1 Principle of the digital inputs

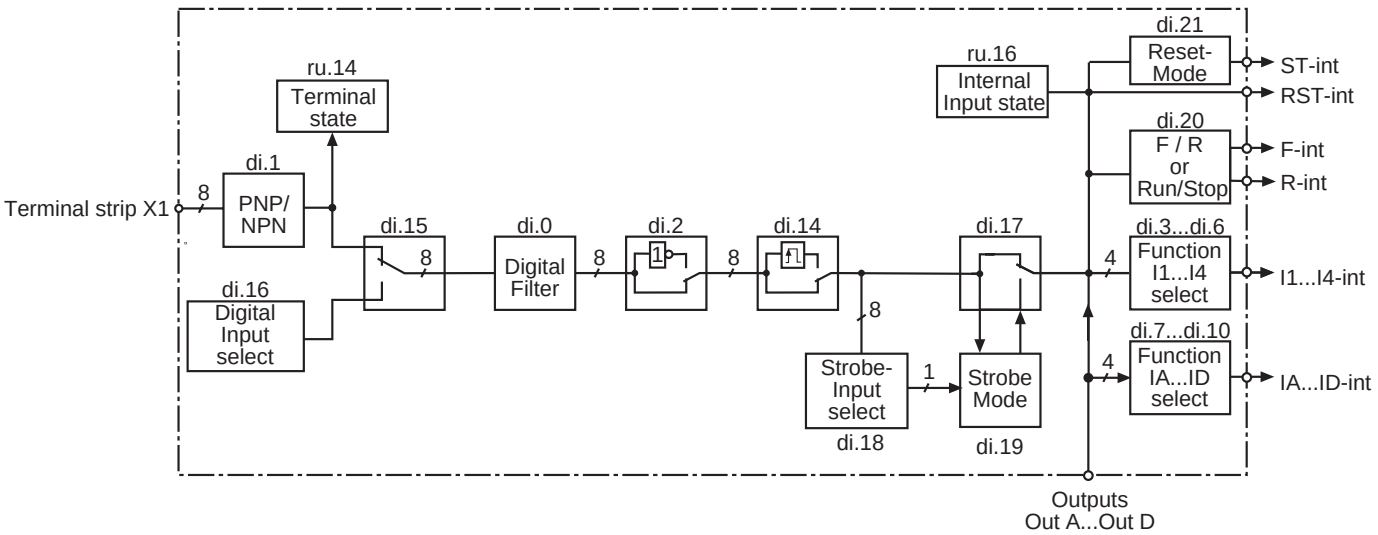

6.3.2 Input Signals PNP / NPN (di.1)

Picture 6.3.2.a Digital Inputs in PNP-Control (di.1 = 0)

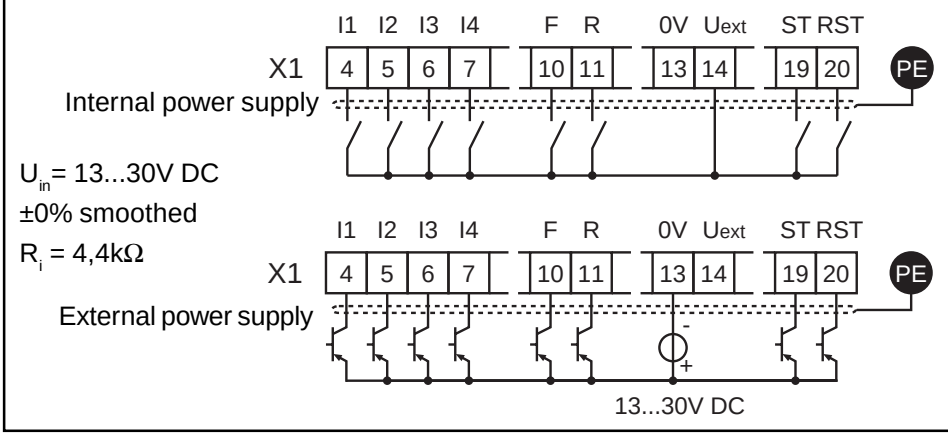

Picture 6.3.2.b Digital Inputs in NPN-Control (di.1 = 1)

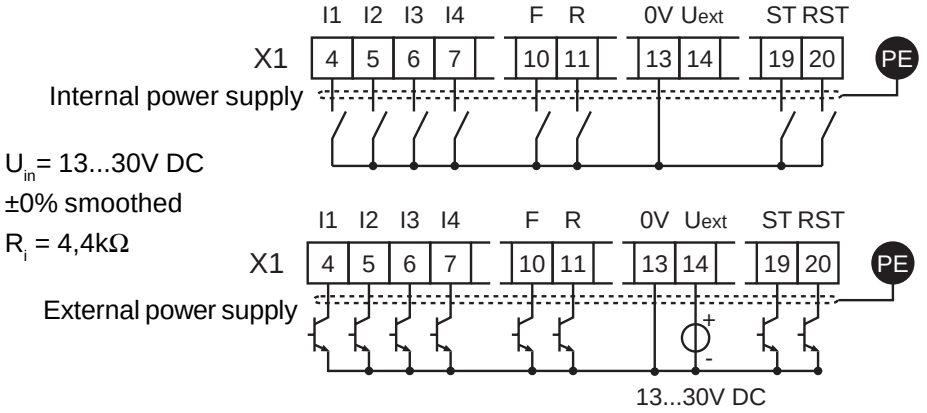

6.3.3 Terminal Status (ru.14)

The terminal status shows the logical state of the input terminals. It is irrelevant, if the inputs are active internally or not. If a terminal is triggered, the corresponding decimal value is displayed (see the following table). If several terminals are activated, then the sum of the decimal values is displayed.

Terminal	Name	Function	Decimal Value
X1.19	ST	(Control release)	1
X1.20	RST	(Reset)	2
X1.10	F	(Forward)	4
X1.11	R	(Reserve)	8
X1.4	I1	(Prog. Input 1)	16
X1.5	I2	(Prog. Input 2)	32
X1.6	I3	(Prog. Input 3)	64
X1.7	I4	(Prog. Input 4)	128

Example: ST and F are triggered ➪ displayed value = 1+4 = **5**

6.3.4 Set Digital Inputs with Software (di.15, di.16)

With the parameters di.15 and di.16 the digital inputs can be set without an external switch.

! The control release must be generally operated by hardware, even if switched by software (see picture 6.3.4 AND-Circuit)!

Picture 6.3.4 Set digital inputs with software (di.15/di.16)

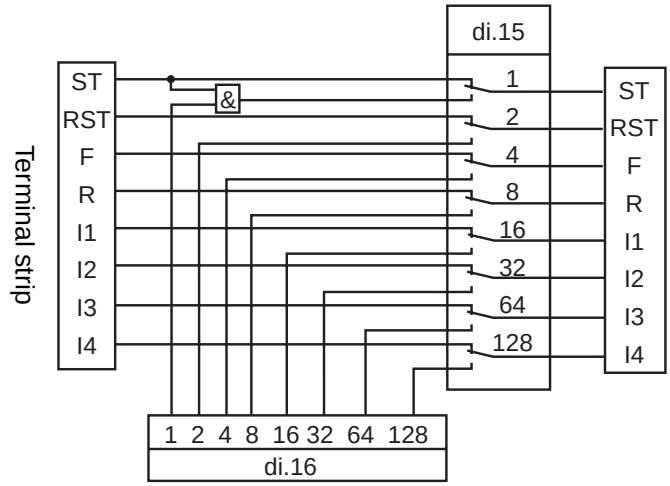

As shown in picture 6.3.4it can be selected with parameter di.15 , if the inputs are switched by the terminal strip (standard) or with parameter di. 16 . Both of the parameters are bitcoded, i.e. according to the following table, the corresponding value of the input must be set. In case of several inputs add up the sum. (exception: control release must always be bridged at the terminal strip).

Terminal	Name	Function	Decimal Values di.15 and di.16
X1.19	ST	(Control release)	1
X1.20	RST	(Reset)	2
X1.10	F	(Forward)	4
X1.11	R	(Reverse)	8
X1.4	I1	(Prog. Input 1)	16
X1.5	I2	(Prog. Input 2)	32
X1.6	I3	(Prog. Input 3)	64
X1.7	I4	(Prog. Input 4)	128

6.3.5 Digital Filter (di.0)

The digital filter reduces the sensitivity against disturbances on the digital inputs. With parameter di.0 a reaction time is adjusted. For the duration of the adjusted time the status of all inputs must remain constant. The acceptance takes place at the rising edge. (see picture 6.3.7). At RST with the falling edge!

Parameter	Setting Range	Response Time
di.0	0...31	(adjusted value+1) x program run time (ca. 4ms)

6.3.6 Inverting of the Inputs (di.2)

It can be adjusted with parameter di.2 if a signal is 1- or 0 active (inverted). The parameter is bitcoded, i.e. according to the following table, the corresponding value of the input must be set. If several inputs shall be inverted add up the sum (exception: inverting of the control release is without function).

6.3.7 Edge Triggering (di.14)

Edge triggering has no influence on the control release (ST) as this is only a static signal.

It is standard that the inverter is controlled by static signals, i.e. an input is set as long as there is a signal. However, in practice it can happen that a signal is available only for a limited time, but the input shall remain set. In that case the input can be set to edge triggering. A rising edge with a pulse time > response time of the digital filter is then enough for a start. Switch off with the next rising edge.

Terminal	Name	Function	Decimal Values di.2 and di.14
X1.19	ST	(Control release)	1 (without function)
X1.20	RST	(Reset)	2
X1.10	F	(Forward)	4
X1.11	R	(Reverse)	8
X1.4	I1	(Prog. Input 1)	16
X1.5	I2	(Prog. Input 2)	32
X1.6	I3	(Prog. Input 3)	64
X1.7	I4	(Prog. Input 4)	128

© KEB Antriebstechnik, 1997
All Rights reserved

Picture 6.3.7 Example of a signal transit-plan for Input I1 (di.0=2; di.2=16; di.14=16)

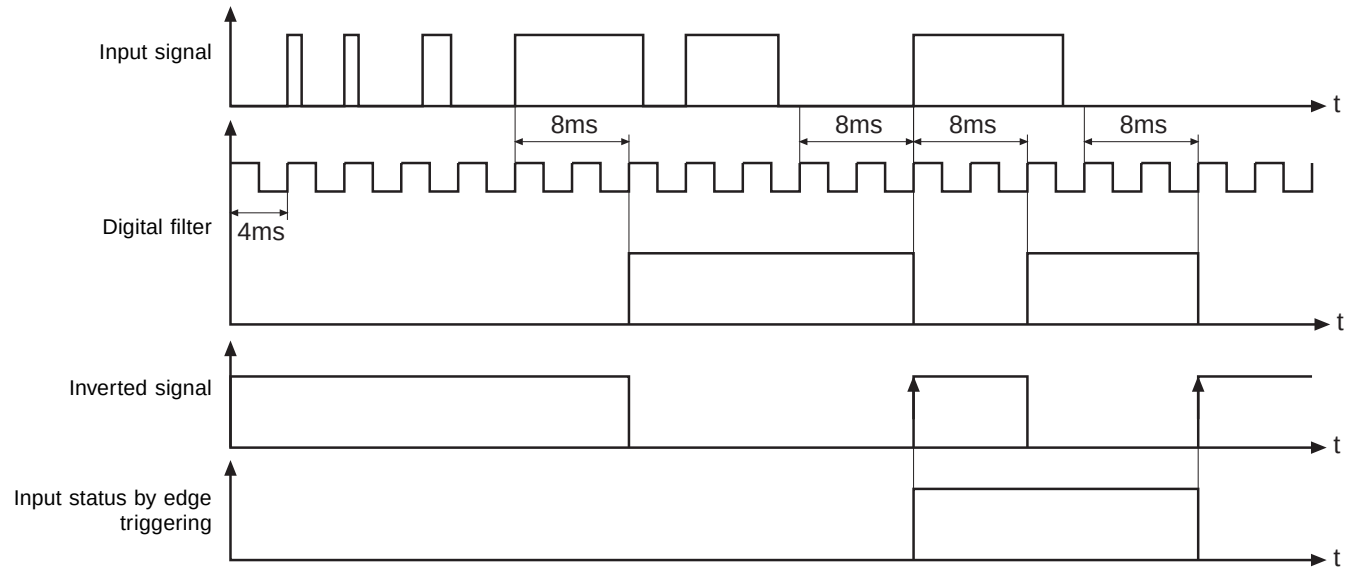

6.3.8 Strobe-dependent Inputs(di.17...di.19)

Mostly a strobe signal is used for triggering the input signals. For example, two inputs shall serve for a parameter set selection. The signals for actication do not arrive at exactly the same time, so for a short time it would be switched in an unintended set. With active strobe (sampled signal) the actual input signals of the strobe-dependent inputs are accepted and retained unitl the next scanning.

Which Inputs are switched by Strobe?

With di.17 every input can be selected as strobe-dependent input. di. 17 has no function for the control release, because it is a static input.

Where is the Strobe Signal coming from?

With parameter di.18 every input can be adjusted as strobe **in addition** to its programmable function. If there are several inputs adjusted as strobe, these are **OR-logic**. With the next rising edge of the clock signal, the strobe is triggered.

di.17 Strobe-dependent Inputs
di.18 Selection of Strobe Signal

Terminal	Name	Function	Decimal Values di.17 and di.18
X1.19	ST	(Control release)	1
X1.20	RST	(Reset)	2
X1.10	F	(Forward)	4
X1.11	R	(Reverse)	8
X1.4	I1	(Prog. Input 1)	16
X1.5	I2	(Prog. Input 2)	32
X1.6	I3	(Prog. Input 3)	64

© KEB Antriebstechnik, 1997
All Rights reserved

Edge-active strobe or static strobe?

It is standard, that the strobe is edge active, i.e. the input states with the rising edge are accepted and held to the next edge. In some case it is useful to use the strobe as a Gate-Function. For this case the strobe signal is a static, i.e. the input signals are accepted as long as the strobe is set. (or the Gate is open).

di.19 Strobe mode

Parameter	Setting Range	Function
di.19	0	edge active strobe (see picture 6.3.8.a)
	1	static strobe (see picture 6.3.8.b)

Picture 6.3.8.a Edge active strobe

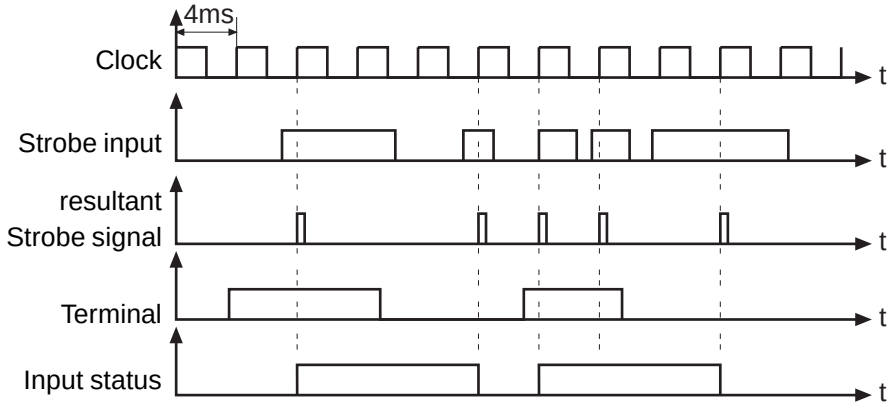

Picture 6.3.8.b Static strobe

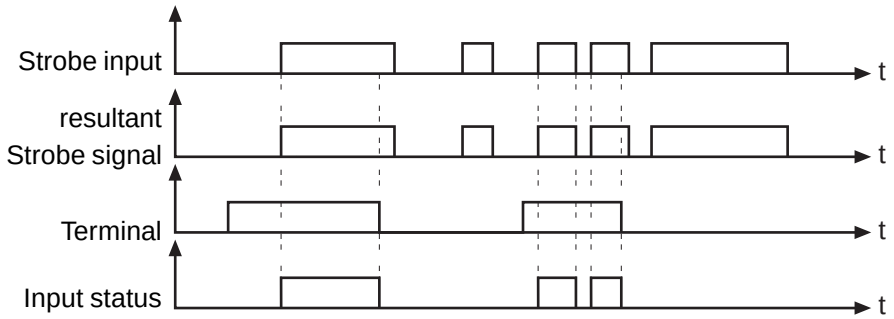

6.3.9 Mode of Rotation setting (di.20 Bit0)

The terminals Forward (F) and Reverse (R) are non-programmable, but their function can be influenced with this parameter.

For additional functions of di.20 see at (Chap. 6.4 Page 7) and (Chap. 6.9.6)

di.20 = 1 (standard) **di.20 = 0**

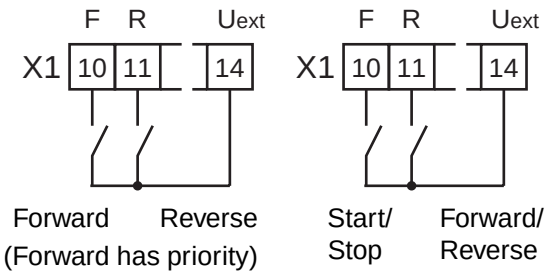

6.3.10 Functional Assignment (di.3...di.10)

With the following parameters, the programmable inputs I1...I4 and the internal inputs IA...ID are assigned to the functions requested.

di.3	di.4	di.5	di.6	di.7	di.8	di.9	di.10
⇓	⇓	⇓	⇓	⇓	⇓	⇓	⇓
I1	I2	I3	I4	IA	IB	IC	ID

The following table contains the possible functions and the corresponding decimal values. To activate a function, the decimal value of the assigned parameter of the input has to be set.

di.3...di.10	Function
0	no function
1	parameter set selection
2	reset set 0 for input-coded parameter set selection
3	activate DC-braking
4	activate energy-saving function
5	activate Lad-stop
6	trigger external errors
7	motorpoti - increase value (see „motorpoti“)
8	motorpoti - decrease value (see „motorpoti“)
9	fixed-frequency presetting (only for I1 and I2e)
10	motorpoti - reset to minimal frequency (see „motorpoti“)
11	release REF - input (see „analog inputs“ An.22 value 1)
12	release ±REF - input (see „analog inputs“ An.22 value 2)
13	release analog option (see „analog inputs“ An.22 value 16)
14	PI-controller: reset of fade-in (see „PI-controller“)
15	PI-controller: reset of P-and I-past (see „PI-controller“)
16	PI-controller: reset of I-past (see „PI-controller“)

6.3.11 Input status (ru.16)

The input status shows the binary-coded state of the digital inputs, internally set for further procedures. It is irrelevant if the external terminals are active or not. If an input is triggered, the corresponding decimal value is displayed (see the following table). If several inputs are triggered, then the sum of the decimal values is displayed.

Terminal	Name	Function	Decimal value
X1.19	ST	(Control release)	1
X1.20	RST	(Reset)	2
X1.10	F	(Forward)	4
X1.11	R	(Reverse)	8
X1.4	I1	(Prog. Input 1)	16
X1.5	I2	(Prog. Input 2)	32
X1.6	I3	(Prog. Input 3)	64
X1.7	I4	(Prog. Input 4)	128

Example: ST and F are triggered ➪ displayed value = 1+4 = **5**

6.3.12 Reset-Mode ST (di.21)

With the factory settings a reset is triggered at opening terminal ST (X1.19). Parameter di.21 can change the behaviour of the terminal as follows:

di.21	Reset-Mode ST
0	Reset on falling edge of terminal ST
1	Reset on rising edge of terminal ST
2	No Reset at opening terminal ST

© KEB Antriebstechnik, 1997
All Rights reserved

6.3.13 Short Description - Digital Outputs

Picture 6.3.13 Principle of digital outputs

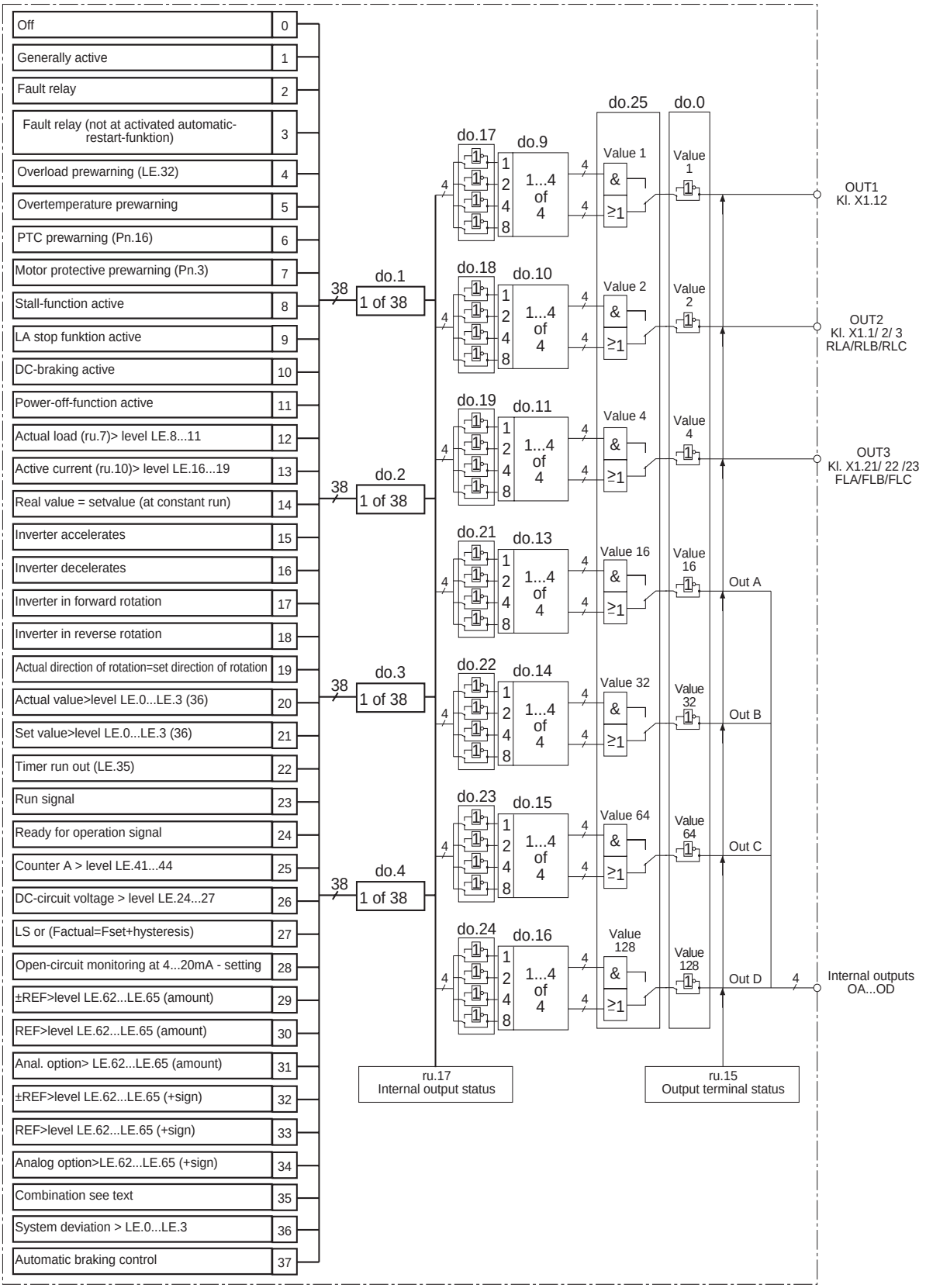

The KEB COMBIVERT has

- 1 Transistor output	Out1 terminal X1.12 (AOUT)
- 2 Relay outputs	Out2 terminal X1.1 / X1.2 / X1.3 (RLA, RLB, RLC)
	Out3 terminal X1.21/ X1.22/ X1.23 (FLA, FLB, FLC)
- 4 internal outpus	OA...OD (firmly connected with the inputs IA...ID)

From the 35 different conditions you can choose up to 4 for the switching of the digital outputs. These are entered in do.1...do.4. Parameter ru.17 indicates, whether one or several of these conditions are met. For each output it can now be selected which of the 4 conditions shall be valid (do.9...do.16). You can choose between no condition or all 4 conditions. For each output every condition can still be inverted before the selection (do.17...do.24). As standard all conditions (if several are selected) are OR-linked, i.e. if one of the selected conditions is met, the output switches. With do.25 this can be changed into AND-function, i.e. all of the conditions selected for the output must be met, before it is set. Parameter do.0 serves to negate one or several outputs. ru.15 serves for the indication of the real or through negating switched outputs. The internal outputs (OA...OD) are directly connected with the internal inputs IA...ID (see picture 6.3.1).

6.3.14 Output Signals

! At transistor output X1.12 a current of 50mA can be taken, so that 50mA remain for the supply of the digital inputs!
At inductive load on the relay outputs or the trasistor output a **protective wiring** must be provided (freewheeling diode).

Picture 6.3.14 Connection of digital outputs

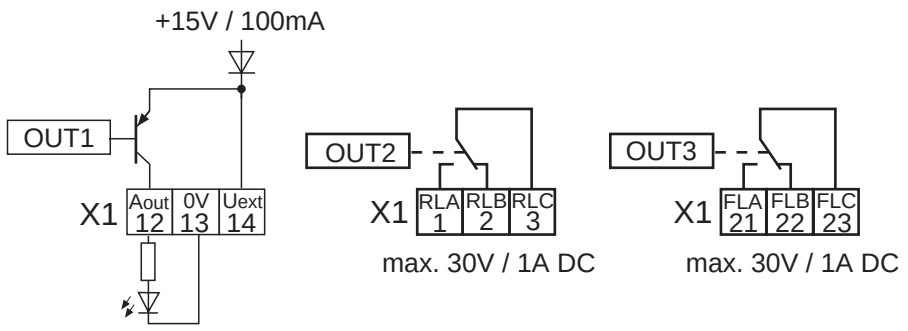

6.3.15 Output Conditions (do.1...do.4)

From the following switching conditions up to 4 conditions can be selected for further processing. The values are then entered in parameters do.1...do.4.

Value	Function
0	**off**
1	**always active**
2	**Faul relay** trips when inverters switches off with error
3	**Fault relay**, like 2, but not for errors, that are automatically reset at activated „Auto-Restart function“
4	**Overload Warning!** ru.24 is an overload counter that counts in steps of 1 %. At 100 % the inverter switches off. With LE.32 a percentual value can be adjusted, at which the inverter shows the message (standard value 80% overload).
5	**Overheating Warning!** Depending on the power circuit the inverters switch off at a temperature between 70...90°C with error Overheating. With LE.34 any value between 0...100°C can be adjusted at which the warning shall be given.

© KEB Antriebstechnik, 1997
All Rights reserved

Value	Function
6	**PTC-Warning**, at tripping of the motor-PTC connected to the terminals OH/OH. After expiration of an adjustable delay Pn.15 (0...120s) the inverter switches off.
7	**Motor protective relay-Warning**, if the electronic motor protective switch (Pn.3) is set to warning (=value 1 or 2).
8	**Max. constant current** (Stall) exceeded (Pn.13. See function „Constant current limit“.
9	**Ramp-stop function active** (LA-/LD-Stop) , voltage or current at acceleration /deceleration exceeded. See function „Ramp stop“.
10	**DC-Braking active**; see function „DC-braking“.
11	**Power-Off-Mode active**; see function „Power-Off-Mode“
12	**Load** (ru.7) > than the adjusted load levels 1...4 in LE.8...LE.11. Load level 1 applies to do.1, ...and so on.
13	**Active current** (ru.10) > than the adjusted active current level 1...4 in LE.16...LE.19. Active current level 1 applies to do.1, ...and so on.
14	**Actual value** = setpoint value at constant operation; at ru.0 = nOP, LS, Error or SSF the condition is met.
15	**Inverter** is in acceleration phase, at ru.0 = FAcc. rAcc and LAS (acceleration stop)
16	**Inverter** is in deceleration phase, ar ru.0 = Fdec, rdec and LDS (deceleration stop)
17	**Clockwise** rotation (forward); not at ru.0 = no.P, LS or Error
18	**Counter**-clockwise rotation (reverse); not at ru.0 = no.P, L or Error
19	**Actual direction** of rotation = set direction of rotation
20	**Actual value** (ru.3) > than the adjusted frequency level 1...4 in LE.0...LE.3. Frequency level 1 applies to do.1, ...and so on.
21	**Setpoint value** (ru.6) > than the adjusted frequency level 1...4 in LE.0...LE.3. Frequency level 1 applies to do.1, ...and so on.
22	**Timer** from LE.35 has expired. (see function „Timer“)
23	**Operating signal**; if no error has occurred ru.0 <> error
24	Run **signal**; when the modulation of the inverter is active
25	**Counter A** > than the adjusted value in parameter counter A level (LE.41)
26	**DC voltage** > than the adjusted UZK-level 1...4 in ...LE.27. UZK-level 1 applies to do.1,...and so on.
27	**Low Speed** (ru.0=LS) or (Factual=Fset and load (ru.7) in the load window); the load window is defined as follows: for switching condition — Lower Limit — Upper Limit 1 (do.1) — LE.8 — LE.9 2 (do.2) — LE.9 — LE.10 3 (do.3) — LE.10 — LE.11 4 (do.4) — LE.11 — LE.8
28	**Cable breakage** at 4...20mA setpoint value setting; the condition is met when the setpoint current drops below 2mA
29	**±REF** at output of characteristic amplifier > percent level 1...4 (LE.62...LE.65); without sign evaluation
30	**REF** at output of characteristic amplifier > percent level 1...4 (LE.62...LE.65); without sign evaluation
31	**Analog** option at output of characteristic amplifier > percent level 1...4 (LE.62...LE.65); without sign evaluation; percent level 1 applies to do.1, ...and so on
32	**±REF** at output of characteristic amplifier > percent level 1...4 (LE.62...LE.65); with sign evaluation
33	**REF** at ouput of characteristic amplifier > percent level 1...4 (LE.62...LE.65); with sign evaluation
34	**Analog** option at output of characteristic amplifier > percent level 1...4 (LE.62...LE.65); with sign evaluation; percent value 1 applies to do.1, ...and so on
35	**Combination condition**; Error of OL-Warning or OH-Warning or (status POFF or PLS) and Fout=oHz)
36	System deviation between set and reaL value at regulated operation > frequency level (LE.0...LE.3)
37	Brake control; trips, when the brake is opening (see Chapter 6.9.6)

! The hysteresis at value 29...34 depends on LE.69.
At value 29...31 no negative percentage levels may be adjusted, since then the condition is constantly met!

LE.36 adjust the hysteresis for frequency dependend switch (e.g. constant running; switch conditions depends on real or set value frequency and trigger frequency for DC-Braking)

© KEB Antriebstechnik, 1997
All Rights reserved

6.3.16 Inverting Output Conditions do.17...do.24

Picture 6.3.16 Inverting and selection of switching conditions

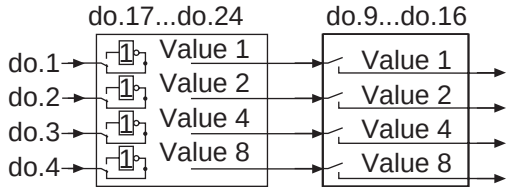

With parameter do.17...do.24 each of the four switching conditions (do.1...do.4) can be inverted separately for each output. Through this function any switching condition can be set as Non-condition. The parameter is bit-coded. According to picture 6.3.16 the weighting, for the switching condition to be inverted, is to be entered in do.17...do.24. If several conditions are to be inverted, add up the values.

Example: Output Out3 shall be set, when the inverter does not accelerate! In this case we put switching condition 15 (inverter accelerates) e.g. on do.1 (enter value 15). With do.19 we invert the switching condition do.1, therefore enter value 1.

6.3.17 Selection Output Conditions (do.9...do.16)

The parameters do.9...do.19 serve for the selection of the previously defined switching condition. The selection is done separately for each output. You can choose between no condition up to all 4 switching conditions. According to picture 6.3.16 the weighting of the selected switching condition is to be entered in do.9...do.16. If several conditions shall be selected, add up the values.

6.3.18 Output Condition Interconnection (do.25)

After the switching conditions are selected for each output, it can now be specified how these are to be linked. As a standard all conditions are OR-linked, i.e. if one of the selected conditions is met, the output is set. As another possibility an AND-function is available, which can be adjusted with do.25. AND-function means that all selected conditions must be met, before the output is set.
Parameter do.25 is bit-coded. The table of 6.3.19 shows the assignment.

Picture 6.3.18 Interconnection of switching conditions and inverting of the outputs

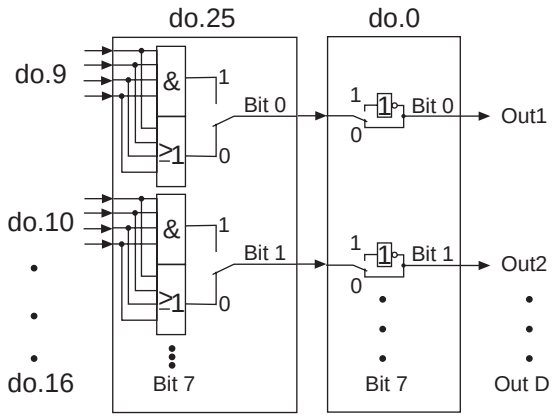

6.3.19 Inverting of the Outputs (do.0)

As shown in picure 6.3.18 with parameter do.0 the outputs can be inverted once more after linkage. The parameter is bit-coded, i.e. according to following table the value belonging to the output is to be entered, If several outputs shall be inverted, add up the values.

Terminal	Name	Function	Decimal value do.0, do.25 u. ru.15
X1.12	Out1	Transistor output	1
X1.1...3	Out2	Relay output	2
X1.21...23	Out3	Relay output	4
-	-	reserved	-
-	Out A	Internal output	16
-	Out B	Internal output	32
-	Out C	Internal output	64
-	Out D	Internal output	128

Example: Out1 and Out3 are set ➪ 1+4 = **5**

6.3.20 Output Terminal Status (ru.15)

The output terminal status indicates logic condition of digital outputs. It is irrelevant whether the output is set based on conditions or through inverting. If an output is set the corresponding value according to above table is shown. If several outputs are set the sum of the decimal values is shown.

6

6.3.21 Used Parameters

Param.	Adr.	R/W	PROG.	ENTER	min	max	Step	default	
di.0	2900h	✔	-	-	0	31	1	0	t_F = (0...31+1)*4ms
di.1	2901h	✔	-	✔	PNP	NPN	1	PNP	-
di.2	2902h	✔	-	✔	0	255	1	0	bit-coded
di.3	2903h	✔	-	-	0	16	1	9	-
di.4	2904h	✔	-	-	0	16	1	9	-
di.5	2905h	✔	-	-	0	16	1	3	-
di.6	2906h	✔	-	-	0	16	1	4	-
di.7	2907h	✔	-	-	0	16	1	0	-
di.8	2908h	✔	-	-	0	16	1	0	-
di.9	2909h	✔	-	-	0	16	1	0	-
di.10	290Ah	✔	-	-	0	16	1	0	-
di.14	290Eh	✔	-	✔	0	255	1	0	bit-coded
di.15	290Fh	✔	-	✔	0	255	1	0	bit-coded
di.16	2910h	✔	-	✔	0	255	1	0	bit-coded
di.17	2911h	✔	-	✔	0	255	1	0	bit-coded
di.18	2912h	✔	-	✔	0	255	1	0	bit-coded
di.19	2913h	✔	-	✔	0	1	1	0	-
di.20	2914h	✔	-	✔	0	7	1	1	0: Run/Stop 1: For/Rev
di.21	2915h	✔	-	-	0	2	1	0	0:Reset↓ 1:Reset↑ 2:no reset

Param.	Adr.	R/W	PROG.	ENTER	min	max	Step	default	
do.0	2A00h	✔	✔	✔	0	255	1	0	bit-coded
do.1	2A01h	✔	✔	✔	0	35	1	14	-
do.2	2A02h	✔	✔	✔	0	35	1	2	-
do.3	2A03h	✔	✔	✔	0	35	1	20	-
do.4	2A04h	✔	✔	✔	0	35	1	0	-
do.9	2A09h	✔	✔	✔	0	15	1	1	bit-coded
do.10	2A0Ah	✔	✔	✔	0	15	1	2	bit-coded
do.11	2A0Bh	✔	✔	✔	0	15	1	3	bit-coded
do.13	2A0Dh	✔	✔	✔	0	15	1	0	bit-coded
do.14	2A0Eh	✔	✔	✔	0	15	1	0	bit-coded
do.15	2A0Fh	✔	✔	✔	0	15	1	0	bit-coded
do.16	2A10h	✔	✔	✔	0	15	1	0	bit-coded
do.17	2A11h	✔	✔	✔	0	15	1	9	bit-coded
do.18	2A12h	✔	✔	✔	0	15	1	9	bit-coded
do.19	2A13h	✔	✔	✔	0	15	1	9	bit-coded
do.21	2A15h	✔	✔	✔	0	15	1	9	bit-coded
do.22	2A16h	✔	✔	✔	0	15	1	9	bit-coded
do.23	2A17h	✔	✔	✔	0	15	1	9	bit-coded
do.24	2A18h	✔	✔	✔	0	15	1	9	bit-coded
do.25	2A19h	✔	✔	✔	0	255	1	0	bit-coded
LE.0	2B00h	✔	✔	-	0,0 Hz	409,5875 Hz	0,0125 Hz	0,0 Hz	-
LE.1	2B01h	✔	✔	-	0,0 Hz	409,5875 Hz	0,0125 Hz	4,0 Hz	-
LE.2	2B02h	✔	✔	-	0,0 Hz	409,5875 Hz	0,0125 Hz	4,0 Hz	-
LE.3	2B03h	✔	✔	-	0,0 Hz	409,5875 Hz	0,0125 Hz	50,0 Hz	-
LE.8	2B08h	✔	✔	-	0 %	200 %	1 %	50 %	-
LE.9	2B09h	✔	✔	-	0 %	200 %	1 %	100 %	-
LE.10	2B0Ah	✔	✔	-	0 %	200 %	1 %	100 %	-
LE.11	2B0Bh	✔	✔	-	0 %	200 %	1 %	100 %	-
LE.16	2B10h	✔	✔	-	0,0 A	460 A	0,1 A	0,0 A	-
LE.17	2B11h	✔	✔	-	0,0 A	460 A	0,1 A	0,0 A	-
LE.18	2B12h	✔	✔	-	0,0 A	460 A	0,1 A	0,0 A	-
LE.19	2B13h	✔	✔	-	0,0 A	460 A	0,1 A	0,0 A	-
LE.24	2B18h	✔	✔	-	100 V	LTK	1 V	250 V	LTK: depend. on power circuit
LE.25	2B19h	✔	✔	-	100 V	LTK	1 V	250 V	LTK: depend. on power circuit
LE.26	2B1Ah	✔	✔	-	100 V	LTK	1 V	250 V	LTK: depend. on power circuit

© KEB Antriebstechnik, 1997
All Rights reserved

Param.	Adr.	R/W	PROG.	ENTER	min	max	Step	default	
LE.27	2B1Bh	✔	✔	-	100 V	LTK	1 V	250 V	LTK: depend. on power circuit
LE.32	2B20h	✔	✔	-	0 %	100 %	1 %	80 %	-
LE.34	2B22h	✔	✔	-	0°C	100°C	1°C	70°C	-
LE.36	2B24h	✔	-	-	0,0 Hz	20,0 Hz	0,0125 Hz	0,5 Hz	-
LE.62	2B3Eh	✔	✔	-	-400 %	400 %	0,1 %	0,0 %	-
LE.63	2B3Fh	✔	✔	-	-400 %	400 %	0,1 %	0,0 %	-
LE.64	2B40h	✔	✔	-	-400 %	400 %	0,1 %	0,0 %	-
LE.65	2B41h	✔	✔	-	-400 %	400 %	0,1 %	0,0 %	-
LE.69	2B45h	✔	-	-	0 %	20 %	0,1 %	2,0 %	-
ru.14	200Eh	-	-	-	0	255	1	-	-
ru.15	200Fh	-	-	-	0	255	1	-	-
ru.16	2010h	-	-	-	0	255	1	-	-
ru.17	2011h	-	-	-	0	255	1	-	-

1. Introduction

2. Summary

3. Hardware

4. Operation

5. Parameter

6. Functions

7. Start-up

8. Special Operation

9. Error Assistance

10. Project Planning

11. Networks

12. Applications

13. Annex

6.1 Operating and Applicance Displays

6.2 Analog In- and Outputs

6.3 Digital In- and Outputs

6.4 Set Value and Ramp Adjustment

6.5 Voltage/Frequency Characteristic (U/f)

6.6 Motor Presetting

6.7 Keep on Running Functions

6.8 Parameter Sets

6.9 Special Functions

6.10 Encoder Interface

6.11 PI-Controller

6.12 CP-Parameter Definition

6.4.1 Short Description 3
6.4.2 AUX-Function, Selection of Set Value and Rotation Direction .. 4
6.4.3 Set Value Limits 9
6.4.4 Set Value Calculation 10
6.4.5 Fixed Frequencies 11
6.4.6 Ramp Generator 12
6.4.7 Used Parameters 18

© KEB Antriebstechnik, 1997
All Rights reserved

6.4 Set Value and Ramp Adjustment

6.4.1 Short Description

The set values of the KEB COMBIVERT F4-C can be adjusted analog (±REF / REF) as well as digital. The AUX-function offers the possibility to combine an analog set value with other set value adjustments.
The selection of set value and rotation direction links the different set value sources with the possible sources for direction of rotation. The signal, received in this way, is used for the further set value calculation.
Not until the absolute set value limits are queried, all data required for the ramp calculation are given.

Picture 6.4.1 Principle of set value and ramp adjustment

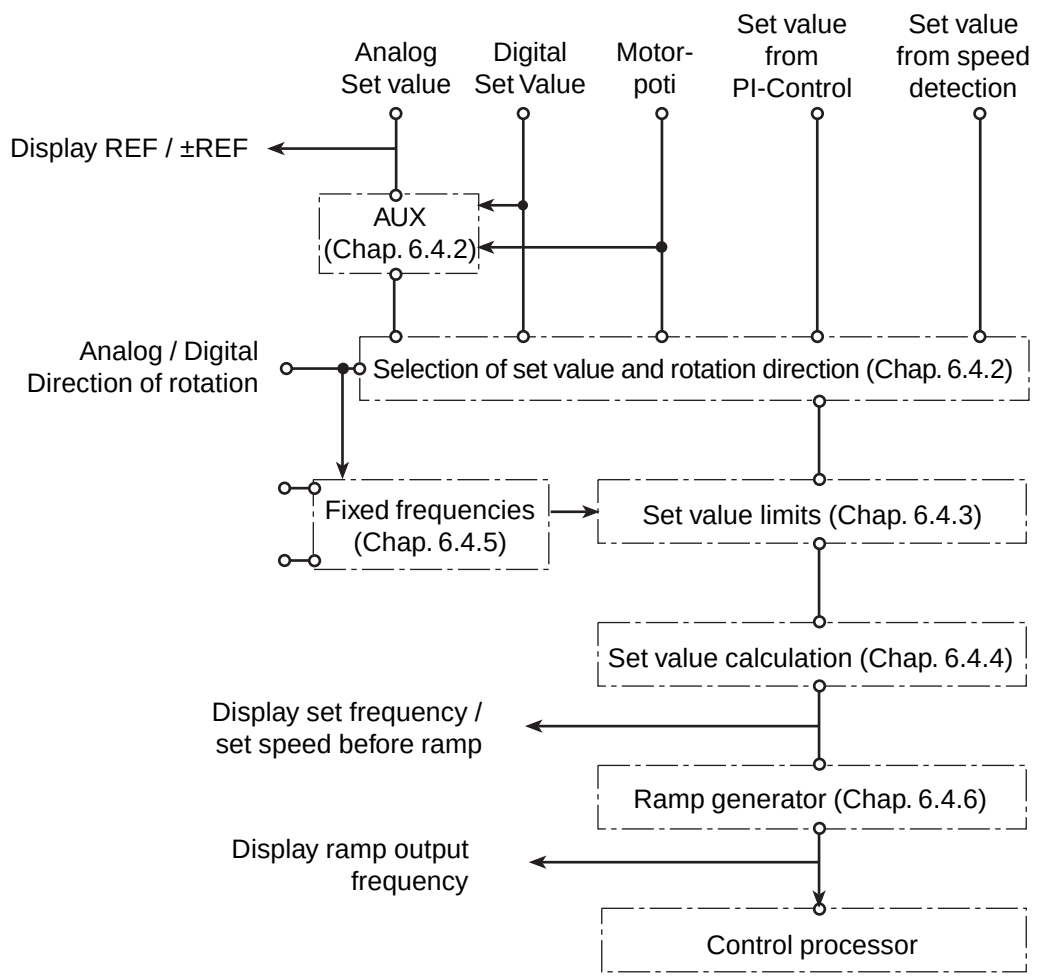

6.4.2 AUX-Function, Selection of Set Value and Rotation Direction

Picture 6.4.2 Set value and AUX-function

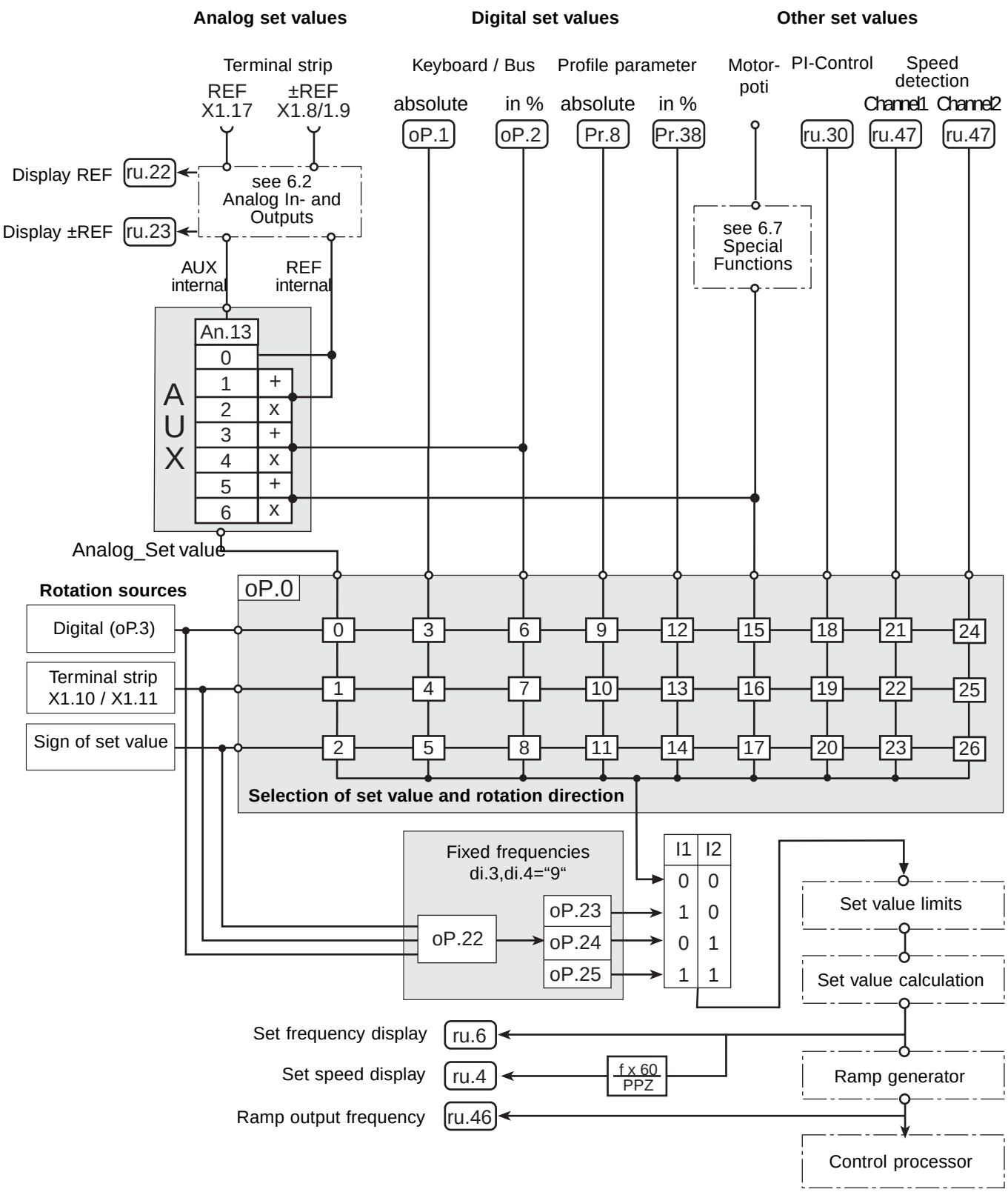

© KEB Antriebstechnik, 1997 All Rights reserved

Set value sources

To adjust a setpoint value two analog set values (±REF und REF), two digital set values (oP.1, oP.2), the motor-poti function, the profile parameters (Pr.8, Pr.38), the PI-Control and two channels for the speed detection are available at KEB COMBIVERT F4-C.

Analog set value

The analog setpoint values are set via ±REF or REF. Chapter 6.2 *„Analog In- and Outputs“* describes the analog signal processing, at the outputs the signals REF-internal and AUX-internal are available for further processing. The display of the setpoint value is done in percent in the parameters ru.23 and ru.24.

Digital set value

With parameter oP.1 *„Absolute digital set value setting“* a set frequency of -409,5875... 409,5875 Hz can be adjusted.
With parameter oP.2 *„Percent digital set value setting“* a set frequency of -100% ... +100% of the maximum frequency /oP.5 / oP.7) can be adjusted (also see **6.4.3 „Set Value Calculation“**).

Profile parameter

Adjustment of absolute set values in rev/min (Pr.8) or percent set value (Pr.38) via the profile parameters according to DRIVECOM specification (also see **11.2.4. „DRIVECOM-Profile Parameter“**).

Motor-poti function

With the motor-poti function a set value of -100%...0...100% can be set within the limits adjusted in parameter oP.4 / oP.5 and oP.6 by way of the digital inputs (see **6.9.13 „Motor-Poti Function“**).

PI-Controller

At controlled operation the manipulated variable of the built-in PI-controller can be used as set value signal. The set value signal has a value range of -100%...100% and is represented by ru.30 (also see **6.11 „Controlled Operation“**)

Speed detection

For synchronous speed control channel 1 or channel 2 can serve alternatively as speed reference. For example, the incremental encoder of the master system is evaluated via channel 1 and used as setpoint value. The incremental encoder of the slave drive is evaluated via channel 2 and used as actual speed value (also see **6.11 „Controlled Operation“**)

AUX-Function (An.13)

The AUX-Function offers the possibility to change other set values (Ref-internal, the absolute digital set value oP.1 or the motor-poti function) by an analog signal (Aux-internal) within the preadjusted maximum values. At the output of the function stands the „Analog_Set Value“ signal (see picture 6.4.2) - thus in the subsequent selection the set value to be changed with An.13 must generally be selected as analog set value (oP.0 = 0, 1 or 2). The Aux-function provides following possibilities for linkage:

An.13	AUX - Input Function
0	Analog_Set value= Ref_internal; Aux not active
1	Analog_Set value= Ref_internal + Aux_internal
2	Analog_Set value= Ref_internal + (Aux_internal/100%) * Ref_internal
3	Analog_Set value= oP.1 + Aux_internal
4	Analog_Set value= oP.1 + (Aux_internal/100%) * oP.1
5	Analog_Set value= Motor-poti + Aux_internal
6	Analog_Set value= Motor-poti + (Aux_internal/100%) * Motor-poti

© KEB Antriebstechnik, 1997
All Rights reserved

Example to AUX-Function

To preset the speed of a drive two potentiometers shall be set. A coarse adjustment of the set value shall be made with the first potentiometer and a fine adjustment with the second potentiometer.

1. Connect potentiometer for coarse adjustment of set value to REF
2. Connect potentiometer for fine adjustment to ±REF
3. Reduce the amplification of the ±REF-channel to the desired fine adjustment (e.g. An.3 = „0,1“ for ±10% change)
4. Adjust An.12 so that ±REF serves as AUX-signal (An.12 = „1“, see 6.2.7)
5. Adjust the AUX-function so that the analog set value is created from Ref_internal +Aux_internal (An.13 = „1“)

Picture 6.4.2.b Example to AUX-Function

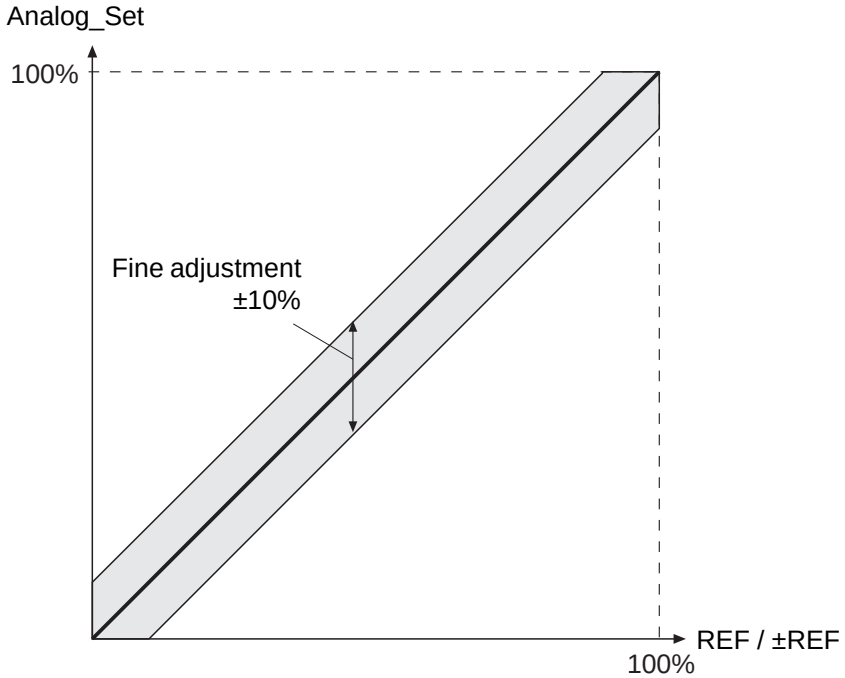

Selection of set value and rotation direction (oP.0)

With parameter oP.0 „Selection of set value and direction of rotation“ the requuired set value source can be linked with the corresponding rotation source (see picture 6.4.2).

Set value sources:

The possible set value sources are a result of the previously described set values.

Sources of direction of rotation:

Regarding the source of direction of rotation there are three different settings possibilitie:

1. Direction of rotation via parameter oP.3 „Digital Rotation Setting“

oP.3	Display	Set direction of rotation	
0	LS	(Low Speed)	standstill
1	F	(Forward)	forward
2	r	(Reverse)	reverse

© KEB Antriebstechnik, 1997
All Rights reserved

2. Direction of rotation via terminal strip

The direction of rotation can be activated by assigning terminal „F“ (forward X1.10) or „R“ (reverse X1.11), If both terminals are assigned simultaneously then the direction of rotation „forward“ has priority.
Connection / activation of direction of rotation see Chapter 6.3 „Digital In- and Outputs“.

3. Direction of rotation via sign of set value

The direction of rotation can be defined by the adjusted set value signal. For analog singals through adjustment of positive or negative voltages. For digital signals through adjustment of positive (without sign) or negative values (negative sign in the display). For the factory setting apply following rules:

Set value 0	->	Rotation forward (F_{set}=0Hz)
Positive value	->	Rotation forward
Negative value	->	Rotation reverse

di.20 Functioning mode of rotation setting

With parameter di.20 the adjustment of direction of rotation can be adapted to special applications.

di.20	Bit		
dec.	2	1	0
0	0	0	0
1	0	0	1
2	0	1	0
3	0	1	1
4	1	0	0
5	1	0	1
6	1	1	0
7	1	1	1

Bit 0: Behaviour of inputs X1.10 and X1.11
0: Run/Stop
1: Forward/Reverse

Bit 1: LS-behaviour at set value-dependent rotation setting and set value 0
0: no LS
1: LS if Kl. X1.10/11=0 and oP.3=LS

Bit 2: Behaviour of negative set values at digital rotation setting or adjustment via terminal strip
0: Negative set values are set to 0
1: Absolute-value generation of set value

Picture 6.4.2.c Principle of di.20 Bit2

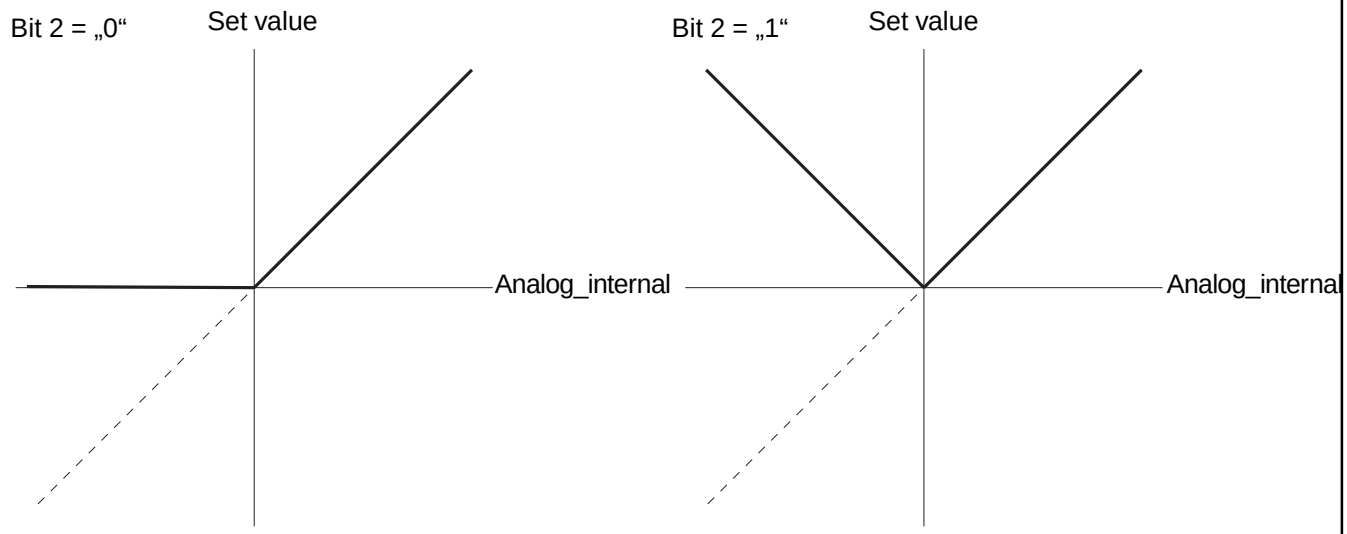

Summary

oP.0	Set value	Direction of rotation
0	Analog (±REF / REF)	digital (oP.3)
1	Analog (±REF / REF)	terminal strip
2	Analog (±REF / REF)	sign of setpoint value
3	Digital absolute (oP.1)	digital (oP.3)
4	Digital absolute (oP.1)	terminal strip
5	Digital absolute (oP.1)	sign of setpoint value
6	Digital percent (oP.2)	digital (oP.3)
7	Digital percent (oP.2)	terminal strip
8	Digital percent (oP.2)	sign of setpoint value
9	Profile parameter absolute (Pr.8)	digital (oP.3)
10	Profile parameter absolute (Pr.8)	terminal strip
11	Profile parameter absolute (Pr.8)	sign of setpoint value
12	Profile parameter percent (Pr.38)	digital (oP.3)
13	Profile parameter percent (Pr.38)	terminal strip
14	Profile parameter percent (Pr.38)	sign of setpoint value
15	Motor-poti	digital (SP.3)
16	Motor-poti	terminal strip
17	Motor-poti	sign of setpoint value
18	PI-Controller manipulated variable	digital (oP.3)
19	PI-Controller manipulated variable	terminal strip
20	PI-Controller manipulated variable	sign of setpoint value
21	Speed detection channel 1	digital (oP.3)
22	Speed detection channel 1	terminal strip
23	Speed detection channel 1	sign of setpoint value
24	Speed detection channel 2	digital (oP.3)
25	Speed detection channel 2	terminal strip
26	Speed detection channel 2	sign of setpoint value

© KEB Antriebstechnik, 1997
All Rights reserved

6.4.3 Set Value Limits

Following limit values can be preset:

Picture 6.4.3 Set value limits

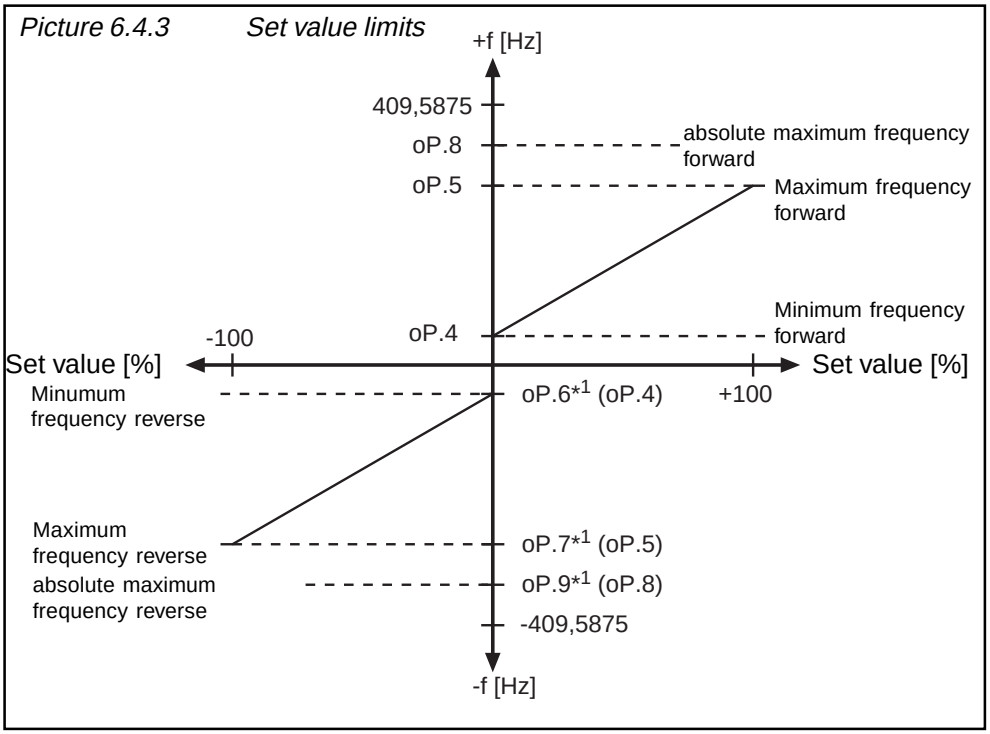

*1 If the value „off“ is adjusted in these parameters (limit value direction of rotation reverse) then the adjusted values in the parameters for direction of rotation forward (oP.4, oP.5 and oP.8) apply to it.

Minimum- / Maximum frequency (oP.4...oP.7)

The minimum and maximum frequencies limit the set value, that is transmitted to the ramp generator for generating the output frequency. At analog set value setting the characteristic is made from it (0% ≙ minimum frequency; 100% ≙ maximum frequency) Separate limits can be adjusted for both directions of rotation. If no values are set for rotation „reverse“ then the values for rotation „forward“ are valid.
Values for „Forward“

Setting range:	oP.4 = 0...409,5875 Hz	Standard = 0 Hz
	oP.5 = 0...409,5875 Hz	Standard = 70 Hz
	oP.6 = oFF, 0...409,5875 Hz	Standard = oFF
	oP.7 = oFF, 0...409,5875 Hz	Standard = oFF

Absolute maximum frequency (oP.8, oP.9)

The absolute maximum frequency forward (oP.8) and reverse (oP.9) limit the possible output frequency of the inverter. Since the set value is always calculated for the maximum frequencies (oP.5, oP.7) it is possible, inspite of different output frequencies, to adjust the characteristic of the analog set value to the same ascent for both directions of rotation (see picture 6.4.3.b). If by way of set changeover the deceleration is done from a higher frequency to the adjusted absolute maximum frequency, the preadjusted deceleration time has no effect.

© KEB Antriebstechnik, 1997
All Rights reserved

Picture 6.4.3.a Set value limits

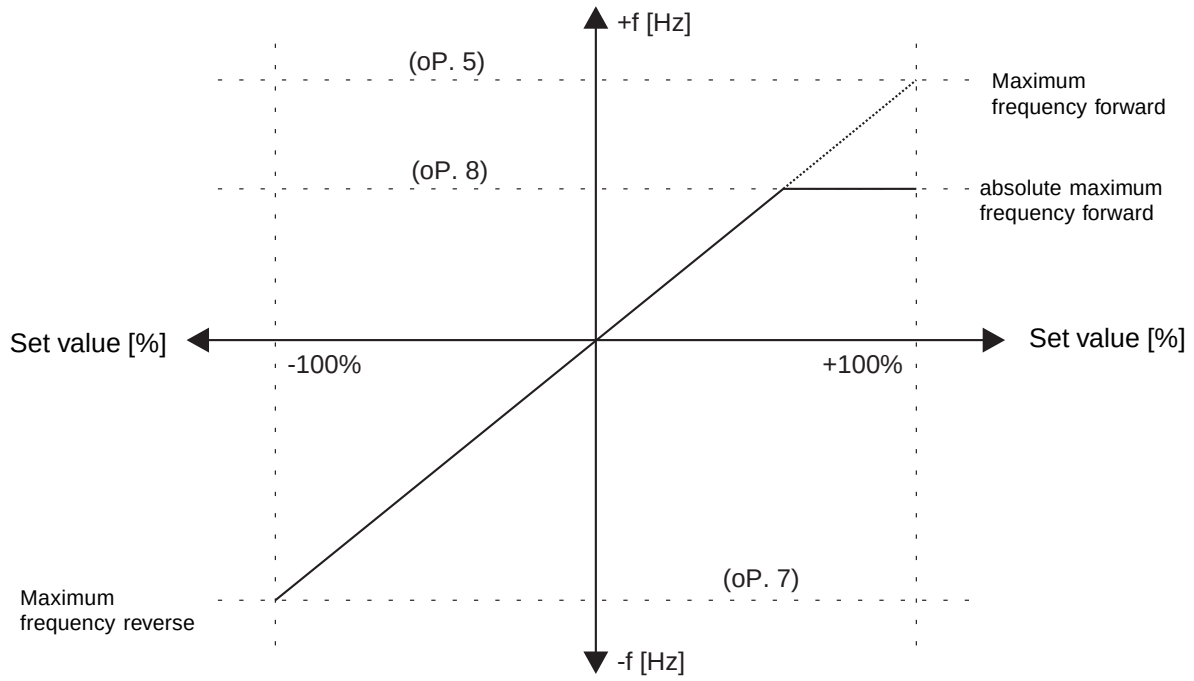

6.4.4 Set Value Calculation

The unit differentiates between two set value settings:

- the percent set value setting, i.e. all values are converted in conformance with the selected limit in percent. With the adjusted set value limits the frequency range is defined. The setting 0 corresponds to the minimum frequency and 100 % correspond to the maximum frequency. The frequency after set value limitation is calculated according to following formula:

$$\text{Set value} = f_{min} + (\text{set value setting [\%]} \times \frac{\Delta f}{100\%})$$

- the absolute set value setting, i.e. the set value is given directly in frequency and is limited only by the adjusted maximum frequency.

The set value sources are assigned as follows:

Percent set value setting	Absolute set value setting
Terminal strip	Keyboard / Bus absolute
Keyboard / Bus in %	Profile parameter absolute
Profile parameter in %	Speed detection
Motor-poti	
Pi-Controller	

© KEB Antriebstechnik, 1997
All Rights reserved

Percent set value setting

Set value setting: -100%...+100%
Set frequency value: set value = f_{min} + (set value setting [%] x $\frac{\Delta f^{1)}}{100\%}$)

1) Δf Forward = maximum frequency (oP.5) - minimum frequency (oP.4)
Δf Reverse = maximum frequency (oP.7) - minimum frequency (oP.6)

① at direction of rotation digital via parameter oP.3 or terminal X1.10/ X1.11 and di.20 = „0...3“ negative set values are internally set to zero

①+② at direction of rotation by way of sign of set value

①+③ at direction of rotation via parameter oP.3 or terminal X1.10/X1.11 and di.20 = „4...7“ negative set values are inverted

Picture 6.4.4.a Percent set value setting

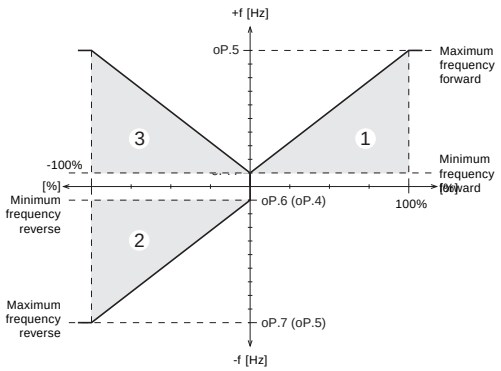

Absolute set value setting

Set value setting: -409,5875...409,5875 Hz
Set frequency value: set value = f_{min}...set value setting..f_{max}

① at direction of rotation via parameter oP.3 or terminal X1.10/X1.11 and di.20 = „0...3“ negative set values are internally set to zero

①+② at direction of rotation by way of sign of set value

ATTENTION! Frequencies up to +/- 409,5875 Hz can be preset, however internally it is calculated only with values up to the adjusted maximum frequencies.
Values set in brackets are valid, when oP.6 or oP.7 are set to „off“.

Picture 6.4.4.b Absolute set value setting

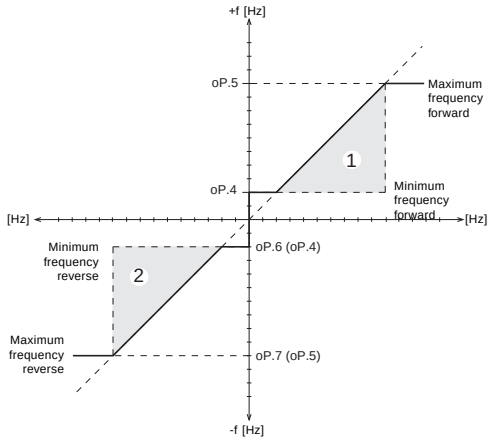

6.4.5 Fixed Frequencies (oP.22...24)

The KEB COMBIVERT supports up to 3 fixed frequencies per parameter set, these are selected via the digital inputs I1 and I2. For that di.3 and di.4 must be assigned with „9“ (also see „Digital Inputs“ Chap. 6.3.10).
The source of direction of rotation is specified in the fixed frequency mode oP.25.

oP.25	Fixed frequency mode
0	fixed frequencies deactivated
1	set direction of rotation via oP.3
2	set direction of rotation via terminal strip
3	set direction of rotation through sign of fixed frequency

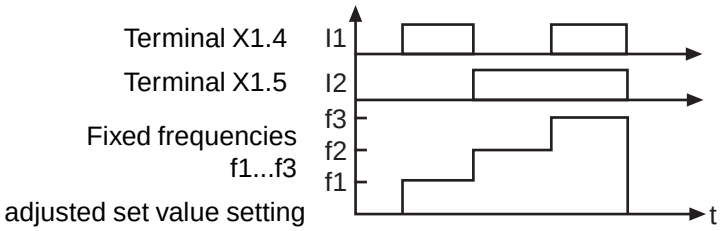

6.4.6 Ramp Generator

The ramp generator assigns an adjustable time to a frequency change, in which the change shall take place. The acceleration time (for pos. frequency changes) and deceleration time (for neg. frequency changes) can be set separately for each direction of rotation. To achieve jerkfree acceleration and deceleration the so-called S-curves can be adjusted in addition to it.

Picture 6.4.6.a Survey of ramp generator

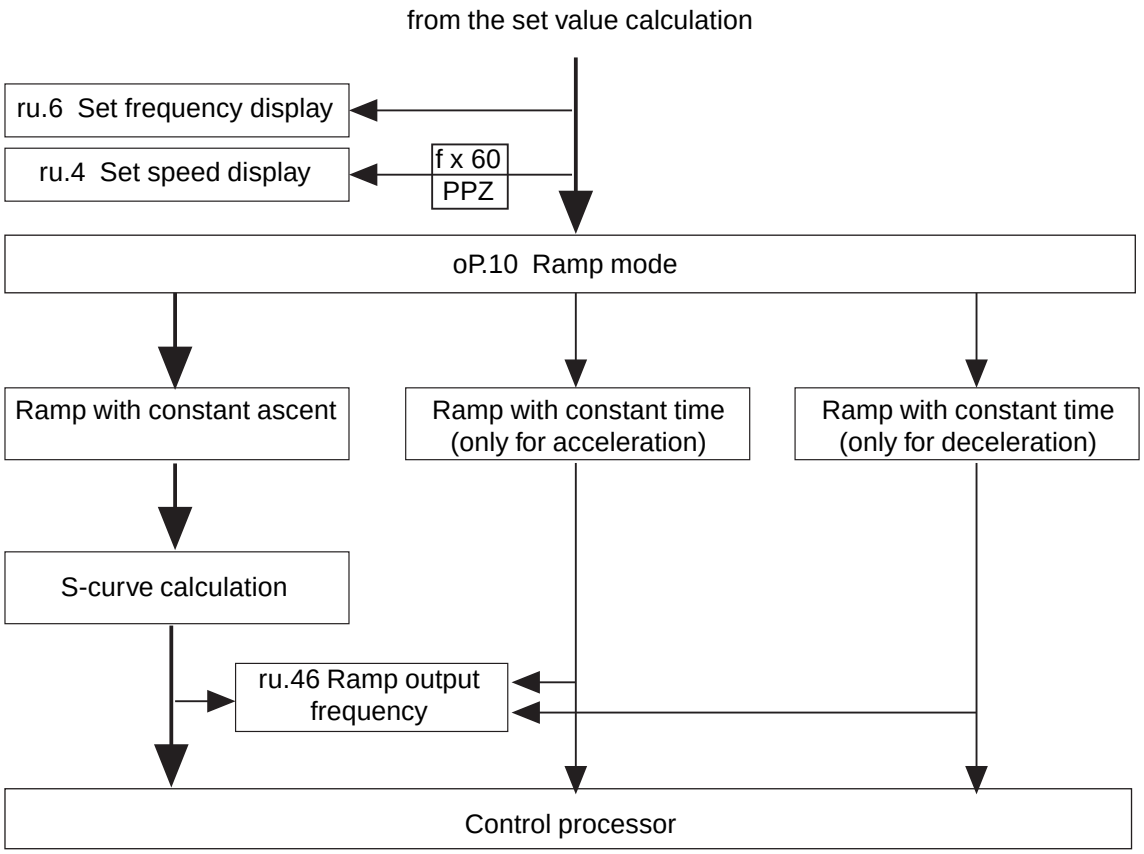

Coming from the set value limitation the set frequency can be displayed in parameter ru.6. Converted into speed the value is represented in ru.4. The ramp mode oP.10 decides, how the ramps are calculated. For the ramp with constant ascent (standard) an S-curve can be adjusted additionally. The set frequency after the ramp generator is represented in parameter ru.46.

Ramp Mode oP.10 This parameter defines whether a ramp is adjusted with constant ascent (standard) or with constant time.

Picture 6.4.6.b Example for different ramp modi

Constant ascent:
If 0....100Hz are driven in 10s, then 0....50Hz are driven in 5s.

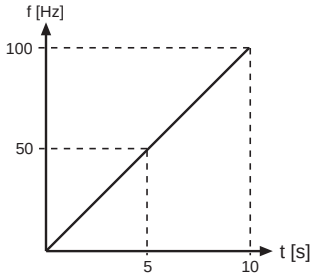

Constant time:
If 0....100Hz are driven in 10s, then 0....50Hz are also driven in 10s.

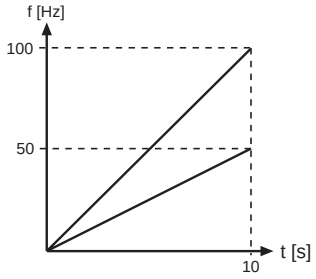

© KEB Antriebstechnik, 1997
All Rights reserved

Ramp with constant ascent: It is the standard case and the drive is dimensioned for a fixed acceleration respectively deceleration torque. The ramp times refer to 100Hz (at ud.11 = 0) and change in proportion to the frequency change. The times to be adjusted are calculated as follows:

$$\frac{\text{desired ramp time}}{\text{ramp time to be adjusted (oP.11...oP.14)}} = \frac{\text{frequency change}(\Delta f)}{100\ \text{Hz}}$$

Picture 6.4.6.d Acceleration and deceleration times

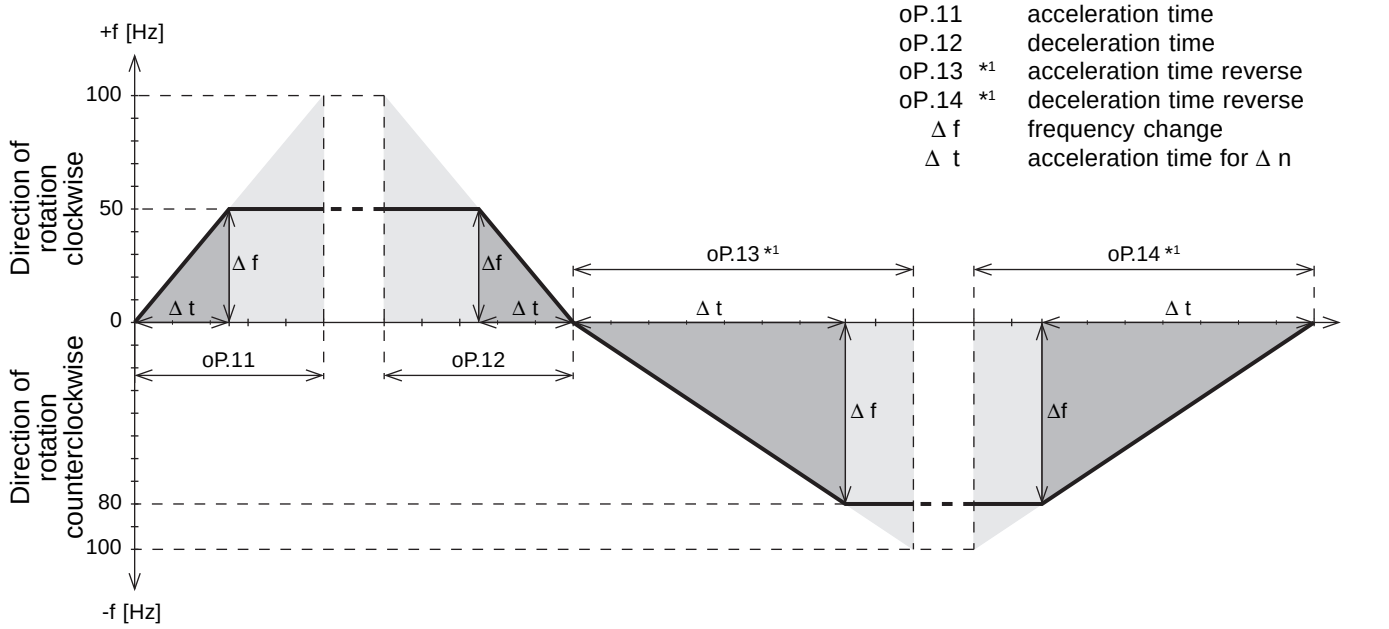

*1 If the value „off“ is adjusted in these parameters (acceleration and deceleration times for direction of rotation reverse), then the values for direction of rotation forward (oP.11 and oP.12) apply.

Calculation of acceleration and deceleration times:

$$\text{oP.11...oP14} = \frac{100\text{Hz x real ramp time}}{\Delta f}$$

A drive shall accelerate from 10Hz to 70Hz in 5s and decelerate from 50Hz to standstill in 10s. This shall apply to both directions of rotation.

$$\text{oP.11} = \frac{5\text{s x 100Hz}}{(70\text{Hz-10Hz})} = 8{,}33\text{s}$$

$$\text{oP.12} = \frac{10\text{s x 100Hz}}{(50\text{Hz-0Hz})} = 20\text{s}$$

Since these values shall apply to both directions of rotation, oP.13 and oP.14 can remain in „oFF“.

© KEB Antriebstechnik, 1997
All Rights reserved

S-curve time For some applications it is an advantage when the drive starts and stops without jerks. This is achieved by rounding the acceleration and deceleration ramps. This rounding time, also called S-curve time, can be adjusted with the parameters oP.15...oP.18. However, S-curves are performed only with the adjustment „Ramp with constant ascent“.

Picture 6.4.6.e S-curve time

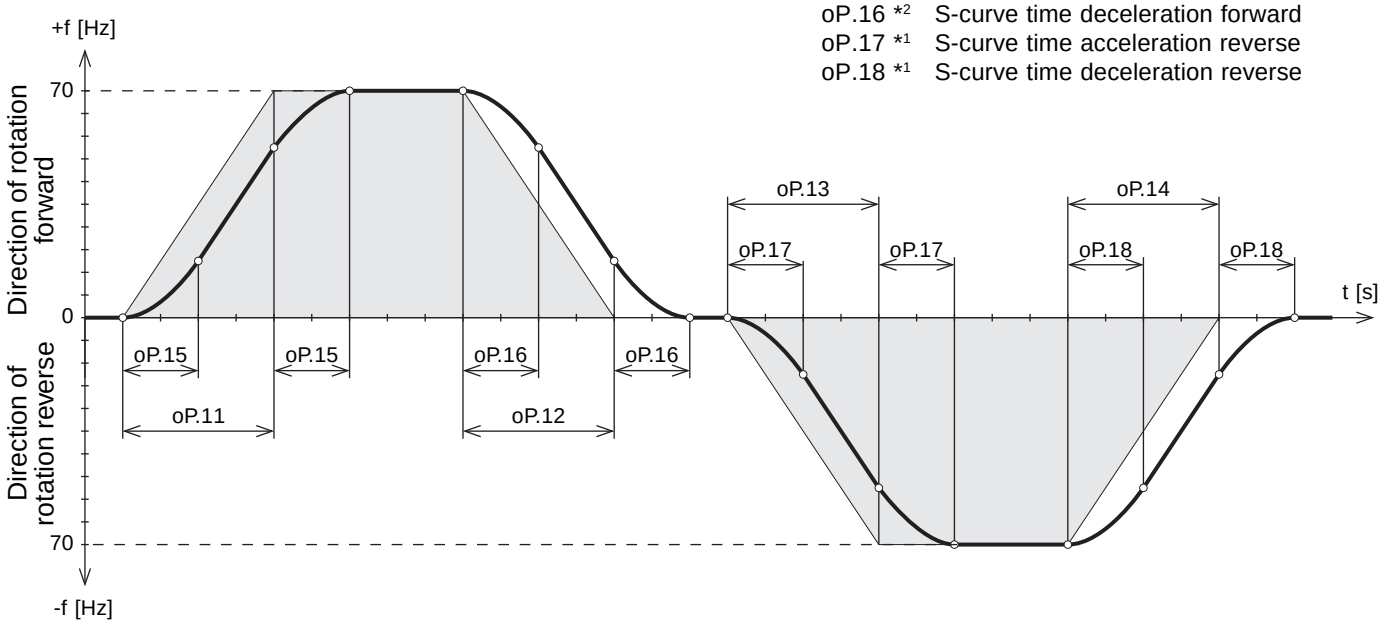

*1 If the value „off“ is adjusted in these parameters (for direction of rotation reverse) then the adjusted values in the parameters for direction of rotation forward are valid.

*2 If, in addition to the parameters oP.17 and oP.18 (S-curve time for direction of rotation reverse), the value „off“ is adjusted in parameter oP.16, then the value adjusted in parameter oP.15 is valid for all S-curve times.

! In order to drive defined ramps with activated S-curve time, the preadjusted acceleration or deceleration times (op.11...oP.14) must be longer than the appropriate S-curve times (oP.15...oP.18). !

<u>Example for accelerating in direction of rotation forward</u>

At the beginning and the end of an acceleration ramp a parabolic curve is driven for the time adjusted in parameter oP.15. Therefore the adjusted ramp time is increased by oP.15.

Entire acceleration time = acceleration ramp (oP.11) + S-curve time acceleration (oP.15)

© KEB Antriebstechnik, 1997 All Rights reserved

Ramp with constant time

At the ramp with constant time the acceleration and deceleration times adjusted with oP.11...oP.14 always equal the real ramp times, independent of the set value. In this operating mode S-curves are not possible. For acceleration the actual set value is always used as reference value, for deceleration the last set values is always used.

Here a little example for the use of ramps with constant time:

Two conveyor belts run with different speed. Both of them receive the Stop-command at the same time. The belts reduce the speed in proportion to the adjusted time and come to a standstill simultaneously.

Picture 6.4.6.f Forward acceleration with constant ramp time

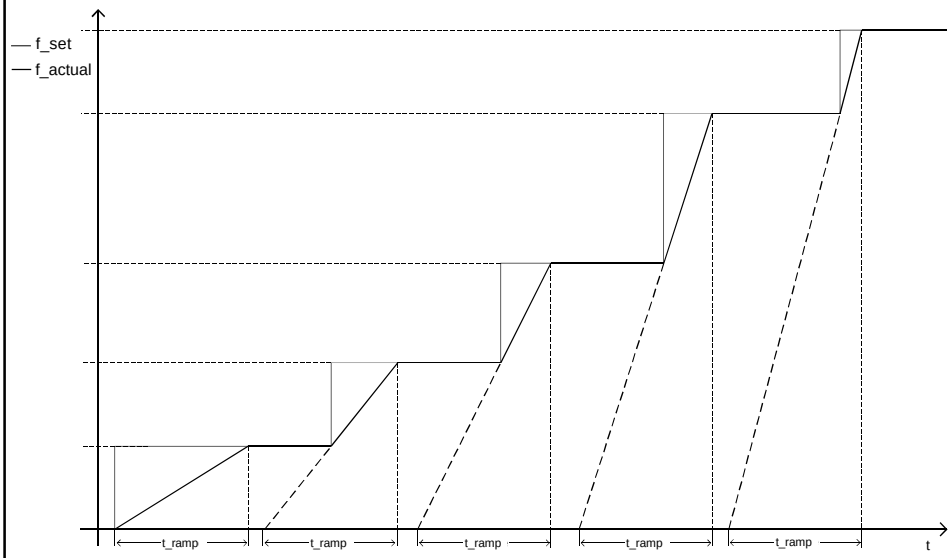

Picture 6.4.6.g Forward deceleration with constant ramp time

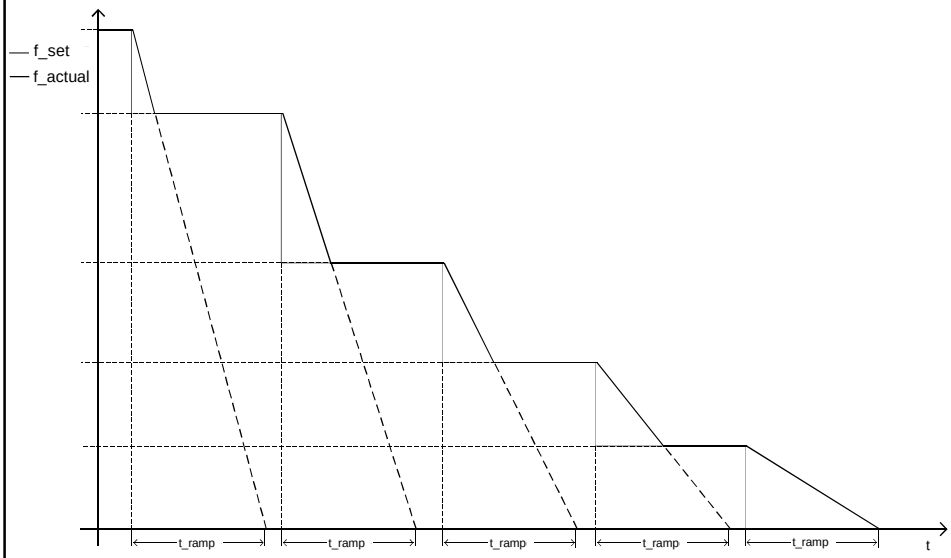

© KEB Antriebstechnik, 1997
All Rights reserved

Ramp Mode (oP.10) The different ramp functions can be adjusted separately for every frequency change (acceleration forward, deceleration forward and so on). The selection is made with oP.10 and is adjustable separately in each set. The function is activated after pressing „ENTER“. In case of several selections the sum of the values must be entered:

Ramp	Bit-No	Value	Mode	Reference frequency
Acc. forward	0 + 1	0 or 2 1 3	const. ascent const. time (B) *const. time (V)	100 / 200 / 400 Hz actual set value last set value at constant run
Dec. forward	2 + 3	0 or 8 4 12	const. ascent *const. time (B) const. time (V)	100 / 200 / 400 Hz actual set value last set value at constant run
Acc. reverse	4 + 5	0 or 32 16 48	const. ascent const. time (B) *const. time (V)	100 / 200 / 400 Hz actual set value last set value at constant run
Dec. reverse	6 + 7	0 or 128 64 192	const. ascent *const. time (B) const. time (V)	100 / 200 / 400 Hz actual set value last set value at constant run

* Do not adjust these values

If the mode constant time is activated for a ramp, then the s-curve function is deactivated for this ramp. The ascent is limited to minimum 100 Hz / 300 s.

Picture 6.4.6.h Graph with ramp modes

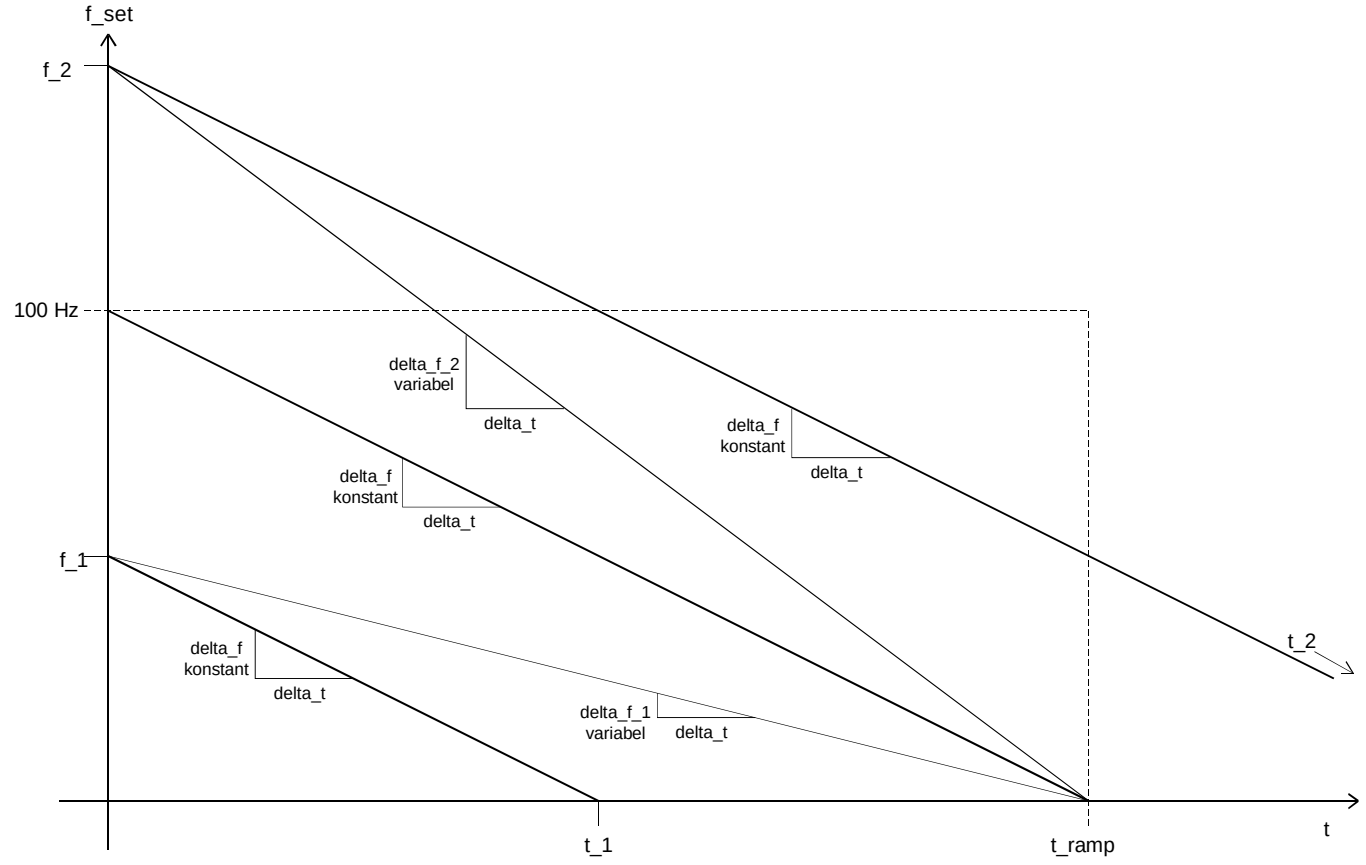

Calculations

The frequency change per raster scan delta_f (step size delta_f) for the mode constant ascent is calculated from the ramp time t_ramp and the reference frequency (100 Hz) as follows:

$$\text{delta_f} = \frac{100\ \text{Hz}}{\text{t_ramp / delta_t}}$$

For different set values the real ramp time is calculated according to following formula:

$$\text{t} = \text{t_ramp} * \frac{\text{f_set}}{100\ \text{Hz}}$$

The actual step size for the mode constant time is calculated from the step size delta_f and the actual set value f_set as follows:

$$\text{delta_f(variable)} = \text{delta_f} * \frac{\text{f_set}}{100\ \text{Hz}}$$

To simplify the internal calculation the reference frequency 102.4 Hz is used:

$$\text{delta_f(variable)} = \text{delta_f} * \frac{\text{f_set}}{102.4\ \text{Hz}}$$

This results in an error of -2.4% for the real ramp time. If a specific real ramp time is to be adjusted multiply the desired value with factor 1.024. Example:

desired ramp time = 10 s
adjusted ramp time = 10 s * 1.024 = 10.24 s

6.4.7 Used Parameters

Param.	Adr.	R/W	PROG.	ENTER	min	max	Step	default	
ru.4	2004h	-	-	-	-	-	0,5 rev/min	-	-
ru.6	2006h	-	-	-	-409,5875Hz	409,5875Hz	0,0125Hz	-	-
ru.22	2016h	-	-	-	-100%	100%	1%	-	-
ru.23	2017h	-	-	-	-100%	100%	1%	-	-
ru.46	202Eh	-	-	-	-409,5875Hz	409,5875Hz	0,0125Hz	-	-
ru.47	202Fh	-	-	-	-	-	0,0125Hz	-	-
oP.0	2100h	✔	✔	✔	0	26	1	1	-
oP.1	2101h	✔	✔	-	-409,5875Hz	409,5875Hz	0,0125Hz	0Hz	-
oP.2	2102h	✔	✔	-	-100 %	100 %	0,1 %	0 %	-
oP.3	2103h	✔	✔	✔	0	2	1	0	-
oP.4	2104h	✔	✔	-	0Hz	409,5875Hz	0,0125Hz	0Hz	-
oP.5	2105h	✔	✔	-	0Hz	409,5875Hz	0,0125Hz	70Hz	-
oP.6	2106h	✔	✔	-	off	409,5875Hz	0,0125Hz	off	off = -0,0125Hz
oP.7	2107h	✔	✔	-	off	409,5875Hz	0,0125Hz	off	off = -0,0125Hz
oP.8	2108h	✔	-	-	0Hz	409,5875Hz	0,0125Hz	409,5875Hz	-
oP.9	2109h	✔	-	-	off	409,5875Hz	0,0125Hz	off	off=-0,0125Hz
oP.10	210Ah	✔	✔	✔	0	255	1	0	refer to text for appropriate values
oP.11	210Bh	✔	✔	-	0 s	300 s	0,01 s	10 s	-
oP.12	210Ch	✔	✔	-	0 s	300 s	0,01 s	10 s	-
oP.13	210Dh	✔	✔	-	off	300 s	0,01 s	off	off = -0,01 s
oP.14	210Eh	✔	✔	-	off	300 s	0,01 s	off	off = -0,01 s
oP.15	210Fh	✔	✔	-	off	5 s	0,01 s	off	off = 0 s
oP.16	2110h	✔	✔	-	off	5 s	0,01 s	off	off = 0 s
oP.17	2111h	✔	✔	-	off	5 s	0,01 s	off	off = 0 s
oP.18	2112h	✔	✔	-	off	5 s	0,01 s	off	off = 0 s
oP.22	2116h	✔	✔	-	-409,5875Hz	409,5875Hz	0,0125Hz	5Hz	activation via I1 and I2
oP.23	2117h	✔	✔	-	-409,5875Hz	409,5875Hz	0,0125Hz	50Hz	activation via I1 and I2
oP.24	2118h	✔	✔	-	-409,5875Hz	409,5875Hz	0,0125Hz	70Hz	activation via I1 and I2
oP.25	2119h	✔	✔	✔	0	3	1	2	-
Pr.8	0108h	✔	-	-	-32767 rev/min	32767 rev/min	1 rev/min	0	-
Pr.38	0126h	✔	-	-	-200	200	0,61	0	-
An.13	280Dh	✔	✔	✔	0	6	1	1	-
di.20	2914h	✔	-	✔	0	7	1	1	-

© KEB Antriebstechnik, 1997
All Rights reserved

1. Introduction

2. Summary

3. Hardware

4. Operation

5. Parameter

6. Functions

7. Start-up

8. Special Operation

9. Error Assistance

10. Project Planning

11. Networks

12. Applications

13. Annex

6.1 Operating and Appliance Displays

6.2 Analog In- and Outputs

6.3 Digital In- and Outputs

6.4 Set Value and Ramp Adjustment

6.5 Voltage/Frequency (U/f) Characteristic

6.6 Motor Presetting

6.7 Keep on Running Functions

6.8 Parameter Sets

6.9 Special Functions

6.10 Encoder Interface

6.11 PI-Controller

6.12 CP-Parameter Definition

6.5.1 Maximal Frequency Mode 3
6.5.2 Rated Point and Boost 3
6.5.3 Additional Rated Point 3
6.5.4 Delta Boost 4
6.5.5 UZK-Compensation 4
6.5.6 Modulation 5
6.5.7 Operating Frequency 6
6.5.8 Used Parameters 6

© KEB Antriebstechnik, 1997
All Rights reserved

6.5 Voltage-/ Frequency Characteristic

This chapter describes all parameters for the adjustment of the voltage/frequency characteristic as well as the appropriate adjustments like modulation, voltage gain (Boost) and operating frequency.

6.5.1 Maximal Frequency Mode (ud.11)

With this parameter the maximum possible output frequency and the frequency resolution are specified. Changes affect all frequency-dependent parameters. The setting range is defined by the power circuit. Changes of this parameter become active after a Power-on Reset.

! The operating frequency (uF.11) must be adjusted at least 10 times higher than the maximal permissible output frequency!

ud.11		Maximal Frequency	Resolution
0	(standard)	409,5875 Hz	0,0125 Hz
1		819,18 Hz	0,025 Hz
2 *		1638,3 Hz	0,05 Hz

* At the adjustment in COMBIVIS all frequency-dependent parameters must be multiplied with 4 since the same Config.-File is used.

6.5.2 Rated Point (uF.0) and Boost (uF.1)

The voltage/frequency characteristic (V/f) is adjusted through the rated point (uF.0) and the Boost (uF.1). The rated point adjusts the frequency at which the maximum output voltage is reached. The Boost adjusts the output voltage at 0 Hz (see picture 6.5.2).

Picture 6.5.2 Rated point and Boost

uF.0 = 0,0...409,5875 Hz; Default = 50 Hz
uF.1 = 0,0...25,5 %; Default = 2,0 %

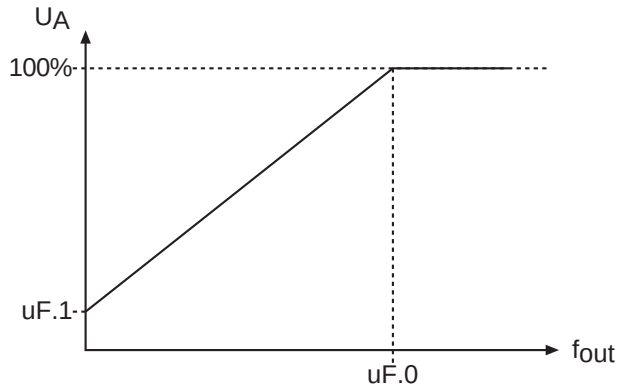

6.5.3 Additional Rated Point (uF.2/uF.3)

To adapt the U/f-characteristic to special conditions an additional point of support can be specified with uF.2 and uF.3. uF.2 defines the frequency and uF.3 the voltage. At uF.2 = 0 Hz the adjustment is ignored.

Picture 6.5.3 Additional rated point

uF.2 = 0,0...409,5875 Hz; Default = 0 Hz
uF.3 = 0,0...100 %; Default = 0 %

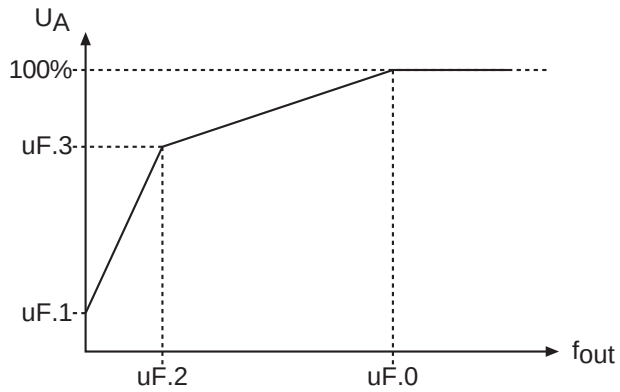

6.5.4 Delta Boost (uF.4/uF.5)

The Delta-Boost is a time-limited Boost, which is used to overcome large breakaway torques. The Delta-Boost acts adding to the Boost, however, the sum is limited to 25.5 %.

Picture 6.5.4 Delta Boost

uF.4 = 0,0...25,5 %; Default = 0 %
uF.5 = 0,0...10,0 s; Default = 0 s

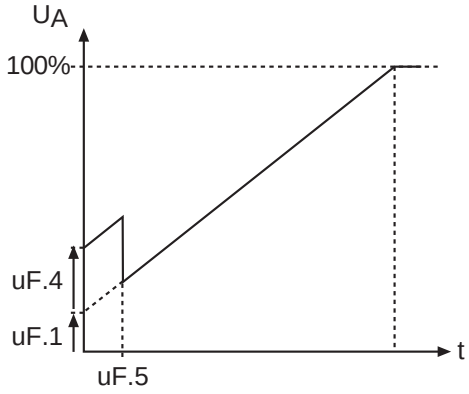

6.5.5 UZK-Compensation (uF.8)

Through fluctuations of the mains voltage or the load the DC-link voltage can change and with it the directly dependent output voltage. At activated DC-link (UZK) compensation the fluctuations of the output voltage are balanced. This means 100 % output voltage correspond to the value adjusted in uF.8, but maximum 105% - (UZK / √ 2). The function also allows the adaption of motors with smaller rated voltage to the inverter.

Picture 6.5.5.a UZK-Compensation

uF.8 = 1...649 V
650 = off (default)

Example: uF.8 = 230V
no boost adjusted

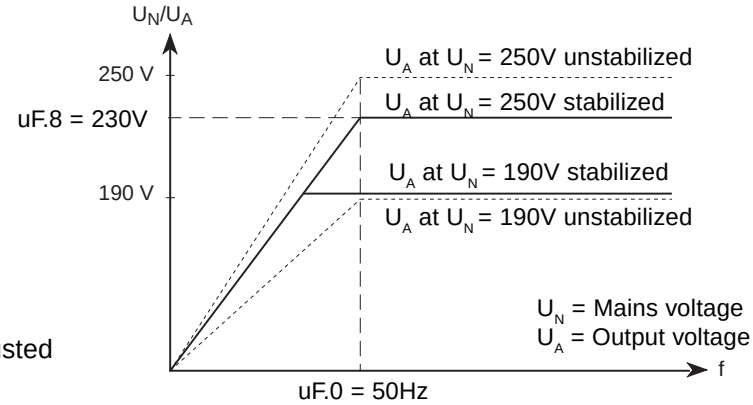

Picture 6.5.5.b Example: Acceleration with load

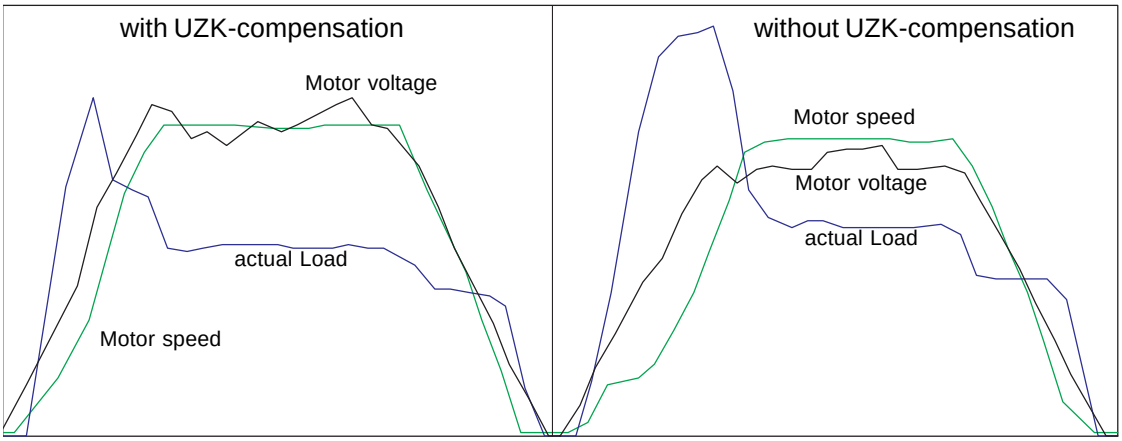

© KEB Antriebstechnik, 1997
All Rights reserved

Picture 6.5.5.c Example: Deceleration of a drive with high inertia load from 80 Hz

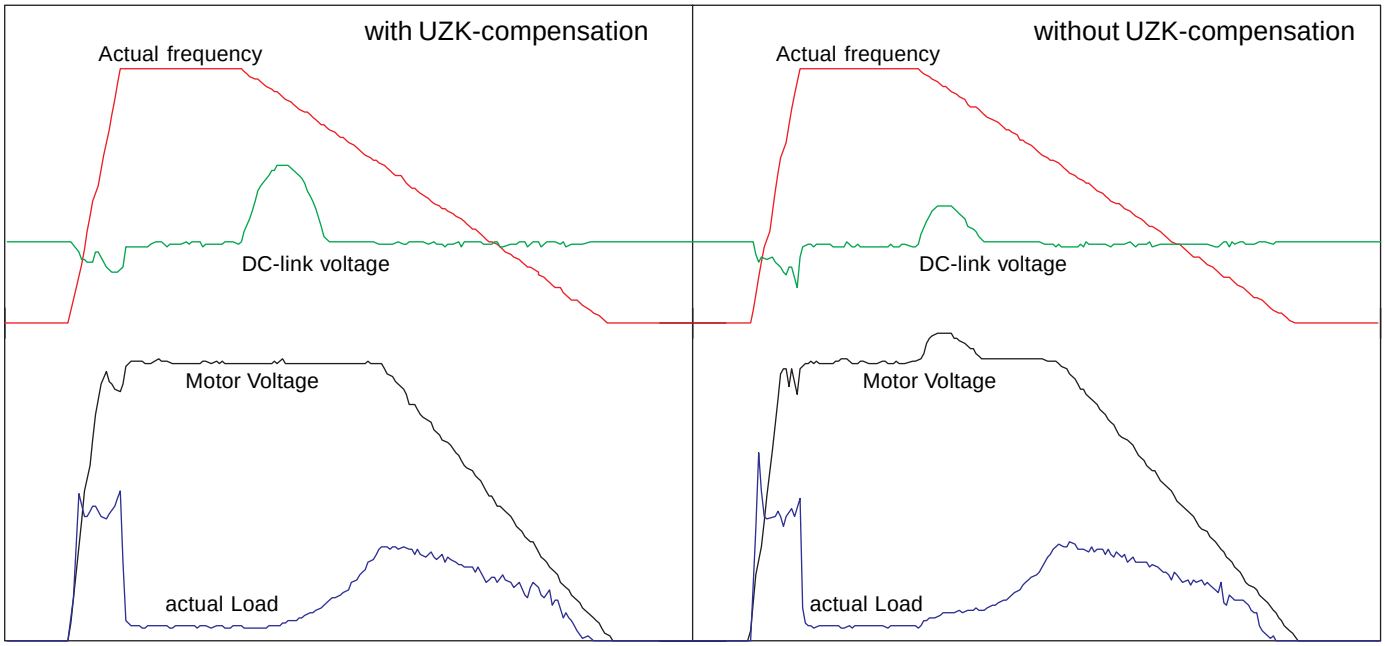

6.5.6 Modulation

For applications that require a lot of torque the KEB COMBIVERT can be operated with overmodulation. Through overmodulation more voltage is available at the motor, thus the slip and the actual load become smaller while the torque remains the same.

Type of Modulation (uF.10)

uF.10	Type of modulation
0 / 2	with overmodulation
1 / 3	without overmodulation (standard)

The settings 0 and 2 or 1 and 3 are identical and exist only for reasons of compatibility to former units.

Modulation / Lower Limit (uF.9)

For some consumers (trafos) it is necessary to increase the minimum output frequency (standard 0Hz). If a frequency is adjusted in uF.9 > 0Hz, then all output frequencies < uF.9 are suppressed and the modulation is deactivated. The acceleration and deceleration ramps start respectively end at this frequency. The switching off and on of the modulation at exceeding or falling below uF.9 is done without hysteresis. At analog setpoint value setting is must be ensured, that the setpoint value is not in the range of uF.9.

© KEB Antriebstechnik, 1997
All Right reserved

6.5.7 Operating Frequency (uF.11)

The operating frequency, with which the power modules are clocked, can be changed depending on the application. The maximum possible operating frequency as well as the factory setting is defined by the used power circuit. Influence and effect of the operating frequency are listed in the following table:

low operating frequency	high operating frequency
- less inverter heating - less discharge current - less switching losses - less radio interferences - improved concentricity at small speeds	- less noise development - improved sine-wave simulation - less motor losses

The actual operating frequency is displayed in parameter ru.44.

6.5.8 Used Parameters

Param.	Adr.	R/W	PROG.	ENTER	min	max	Step	default	
ud.11	260Bh	✔	-	-	0	2	1	0	-
uF.0	2300h	✔	✔	-	0,0 Hz	409,5875 Hz	0,0125 Hz	50,0 Hz	-
uF.1	2301h	✔	✔	-	0,0 %	25,5 %	0,1 %	2,0 %	-
uF.2	2302h	✔	✔	-	0,0 Hz	409,5875 Hz	0,0125 Hz	0,0 Hz	-
uF.3	2303h	✔	✔	-	0,0 %	100,0 %	0,1 %	0,0 %	-
uF.4	2304h	✔	✔	-	0,0 %	25,5 %	0,1 %	2,0 %	-
uF.5	2305h	✔	✔	-	0,0 s	10,0 s	0,01 s	0,0 s	-
uF.8	2308h	✔	✔	-	1 V	649 V; 650=off	1 V	off	-
uF.9	2309h	✔	✔	-	0,0 Hz	409,5875 Hz	0,0125 Hz	0,0 Hz	-
uF.10	230Ah	✔	✔	-	0	3	1	1	-
uF.11	230Bh	✔	✔	-	0	*)	1	*)	-

*) depending on power circuit

© KEB Antriebstechnik, 1997
All Rights reserved

1. Introduction

2. Summary

3. Hardware

4. Operation

5. Parameter

6. Functions

7. Start-up

8. Special Operation

9. Error Assistance

10. Project Planning

11. Networks

12. Applications

13. Annex

6.1 Operating and Appliance Displays

6.2 Analog In- and Outputs

6.3 Digital In- and Outputs

6.4 Set Value and Ramp Adjustment

6.5 Voltage/Frequency (U/f) Characteristic

6.6 Motor Presetting

6.7 Keep on Running Functions

6.8 Parameter Sets

6.9 Special Functions

6.10 Encoder Interface

6.11 PI-Controller

6.12 CP-Parameter Definition

6.6.1 Motor Rating Plate 3
6.6.2 Motor Data from Rating Plate . 3
6.6.3 Motor Data from Data Sheets 3
6.6.4 Motor Stator Resistance 4
6.6.5 Used Parameters 4

6.6 Motor Presetting

The input of the correct motor data is important for many inverter functions, since calculations are derived from it, which the inverter requires in order to achieve the best possible results in controlling Boost, slip compensation, Power-off and speed.

6.6.1 Motor Rating Plate

Picture 6.6.1 Example for motor rating plate

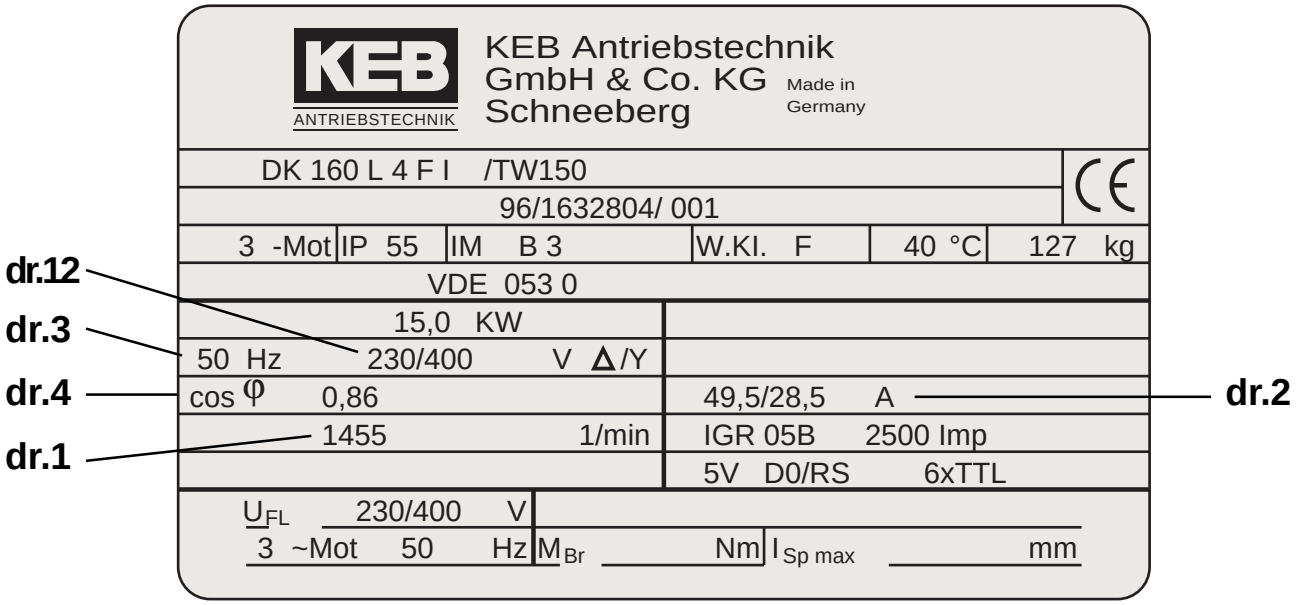

6.6.2 Motor Data from Rating Plate (dr.1...dr.4, dr.12)

Following parameters can be taken directly from the rating plate (see above) and entered:

- dr.1 rated motor speed 0...65535 rev/min
- dr.2 rated motor current 0,0...460,0 A (delta- / star connection)
- dr.3 rated motor frequency 0...409,5875 Hz
- dr.4 rated motor output factor 0,50...1,00
- dr.12 rated motor voltage 150...400 V (delta- / star connection)

6.6.3 Motor Data from Data Sheets (dr.22)

Usually the breakdown torque factor (M_K/M_N) is not included in the motor rating plate. This data is found in the corresponding data sheet or the motor catalog. For KEB standard motors the information is listed in the following table:

kW	0,37	0,75	1,1	1,5	2,2	3,0	4,0	5,5	7,5
M_K/M_N	2,2	2,3	2,5	2,6	3,1	2,8	3,2	3,0	2,9

kW	11,0	15,0	18,5	22,0	30,0	37,0	45,0	55,0	75,0
M_K/M_N	3,3	3,0	2,9	2,6	2,4	2,5	2,5	2,3	2,2

kW	90,0	110,0	132,0	160,0	200,0	250,0	315,0	
M_K/M_N	2,2	2,2	2,2	2,0	2,4	2,3	2,5	

© KEB Antriebstechnik, 1997
All Rights reserved

6.6.4 Motor Stator Resistance (dr.5)

Independent of the motor connection (Δ / Y) the motor stator resistance is measured on a warm motor between 2 phases of the motor incoming cable. In this manner the ohmic line resistance is recorded at the same time (important at long motor cables).

Picture 6.6.4 Measuring of motor stator resistance

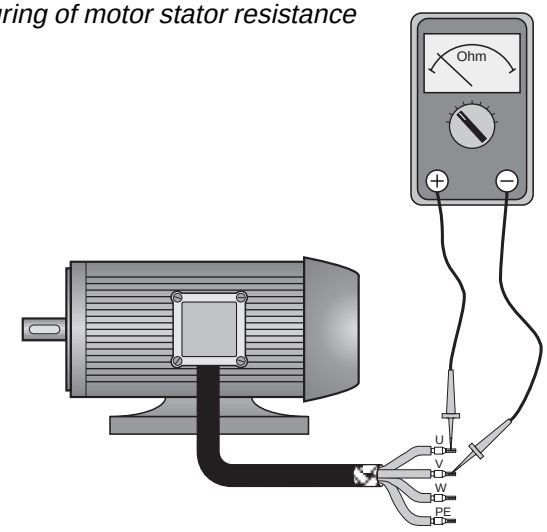

! The maximal value adjustable in dr.5 depends on the power circuit. In case the measured resistance is larger than this value, the maximal value has to be adjusted.

Guide value if no suitable measuring equipment is available!

230V / 400V-motors in Δ-connection		230V / 400V-motors in Y-connection	230V / 400V-motors in Y-connection 400V / 690V-motors in Δ-connection	
P/kW	R/Ω (dr.5)	R/Ω (dr.5)	P/kW	R/Ω (dr.5)
0,37	14,0	42,0	5,5	2,2
0,55	12,0	36,0	7,5	1,5
0,75	9,0	27,0	11,0	0,9
1,1	5,5	16,5	15,0	0,6
1,5	3,5	10,5	18,5	0,45
2,2	2,5	7,5	22,0	0,36
3,0	1,5	4,5	30,0	0,24
4,0	1,1	3,3	45,0	0,15
			55,0	0,12
			75,0	0,09

6.6.5 Used Parameters

Param.	Adr.	R/W	PROG.	ENTER	min	max	Step	default	
dr.1	2401h	✔	✔	-	0 rev/min	65535 rev/min	1	*)	-
dr.2	2402h	✔	✔	-	0 A	460,0 A	0,1 A	*)	-
dr.3	2403h	✔	✔	-	0 Hz	409,5875 Hz	0,0125 Hz	50,0 Hz	-
dr.4	2404h	✔	✔	-	0,50	1,00	0,01	*)	-
dr.5	2405h	✔	✔	-	0,00 Ω	*)	0,01 Ω	*)	-
dr.12	240Ch	✔	✔	-	1,0	4,0	0,1	2,5	-

*) depending on power circuit

© KEB Antriebstechnik, 1997
All Rights reserved

1. Introduction

2. Summary

3. Hardware

4. Operation

5. Parameter

6. Functions

7. Start-up

8. Special Operation

9. Error Assistance

10. Project Planning

11. Networks

12. Applications

13. Annex

6.1 Operating and Appliance Displays

6.2 Analog In- and Outputs

6.3 Digital In- and Outputs

6.4 Set Value and Ramp Adjustment

6.5 Voltage/Frequency (U/f) Characteristic

6.6 Motor Presetting

6.7 Keep on Running Functions

6.8 Parameter Sets

6.9 Special Functions

6.10 Encoder Interface

6.11 PI-Controller

6.12 CP-Parameter Definition

6.7.1 Ramp Stop and Hardware Current Limiting 3

6.7.2 Maximum Constant Current ... 5

6.7.3 Automatic Restart and Speed Search 7

6.7.4 Electronic Motor Protection 9

6.7.5 Dead Time Compensation 11

6.7.6 Base-Block Time 11

6.7 Keep on Running Functions

The protective functions protect the inverter against switch off due to overcurrent, overvoltage as well as thermal overheating. Furthermore, you can restart the drive automatically after an error (Keep on Running).

6.7.1 Ramp Stop and Hardware Current Limit

The ramp stop function serves mainly two purposes. By stopping the ramp on exceeding the adjustable levels, it prevents

- overcurrent error (E.OC) during the acceleration phase
- overvoltage and overcurrent error (E.OC/E.OP) during the deceleration phase,

Moreover, the ramp stop function can be activated by a digital input. The hardware current limit works independent from the software, it can therefore work much faster.

Picture 6.7.1.a Survey of ramp stop functions

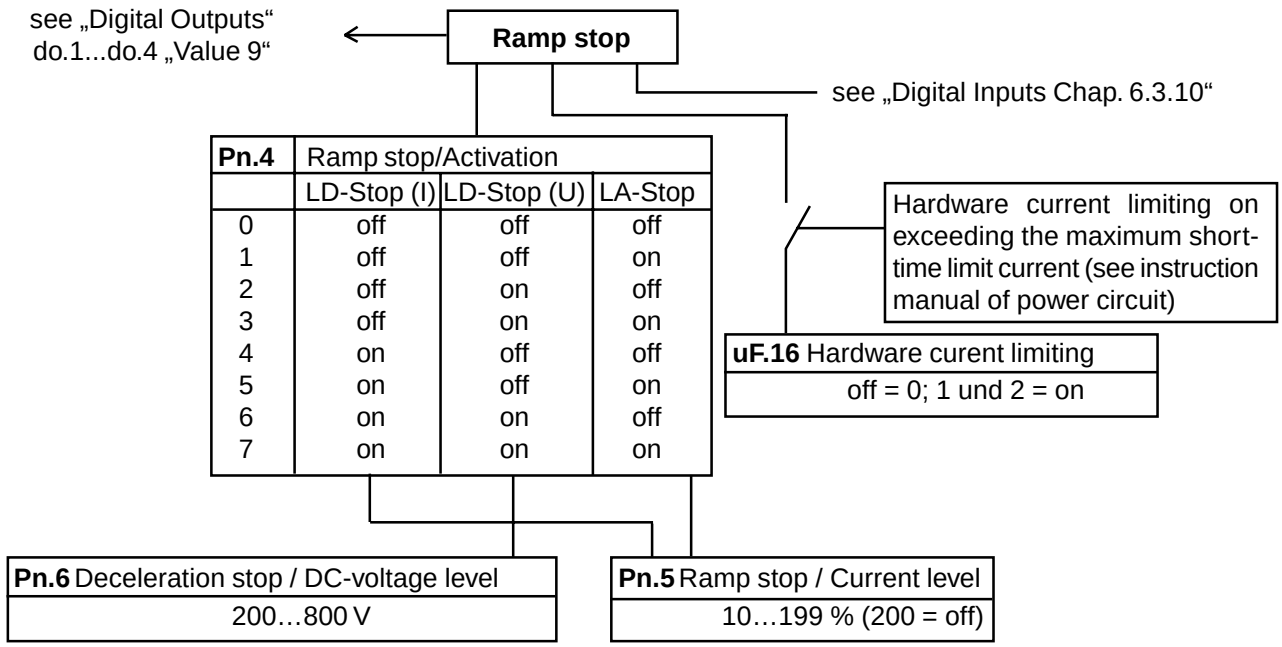

Pn.4	Ramp stop/Activation		
	LD-Stop (I)	LD-Stop (U)	LA-Stop
0	off	off	off
1	off	off	on
2	off	on	off
3	off	on	on
4	on	off	off
5	on	off	on
6	on	on	off
7	on	on	on

LA-Stop This function protects the frequency inverter against switch off due to overcurrent during the acceleration phase. The current level is adjustable with Pn.5 in the range of 10…199 %. The protective function is deactivated with Pn.4.

LD-Stop During deceleration energy is fed into the frequency inverter, which causes a rise of the DC-link voltage.
If too much energy is refed, the inverter can trip to error OP or OC. If the LD-Stop function is activated with Pn.4 the DEC-ramp is regulated according to the adjusted DC-link voltage (Pn.6) or the DC-link current (Pn.5), so in many cases errors are avoided.

Hardware Current Limit

The response of the hardware current limit initiates no error, that can lead to torque dips at the motor shaft. This is of particular importance for the operation „Hoisting and lowering“, since the drive can sack due to missing torque without engagement of the brake.

The hardware current limit (HWSG) is an additional, fast protection for the prevention of overcurrent errors. It is activated on exceeding the maximum short-time limit current (chapter 2.1.6 and 2.1.7). With uF.16 following adjustments are possible:

- 0 (off) hardware current limit switched off
- 1 (on) hardware current limit activated; works in motor as well as in generator operation
- 2 (on) hardware current limit activated; works only in motor operation, but with active function it supplies more torque

© KEB Antriebstechnik, 1997
All Rights reserved

Picture 6.7.1.b Examples for ramp stop function

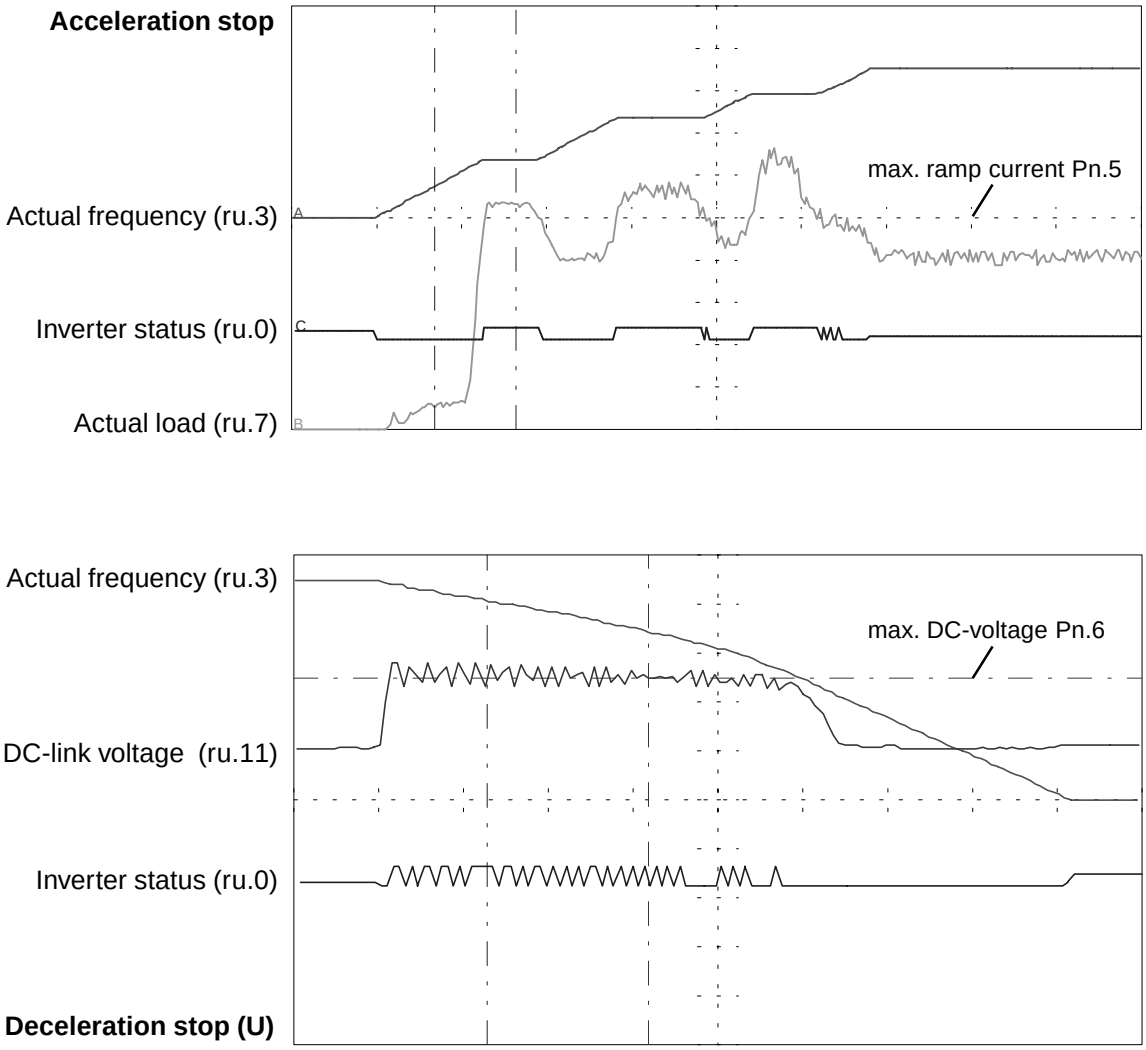

Used Parameters

Param.	Adr.	R/W	PROG.	ENTER	min	max	Step	default	
Pn.4	2204h	✔	✔	-	0	7	1	-	bit-coded
Pn.5	2205h	✔	✔	-	10 %	199 % (200 = oFF)	1 %	140 %	% referring to rated inverter current
Pn.6	2206h	✔	✔	-	200 V	800 V	1 V	720 / 375 V	depending on voltage class
uF.16	2310h	✔	-	-	0	2	1	1	-

© KEB Antriebstechnik, 1997
All Rights reserved

6.7.2 Maximum Constant Current (Stall-function)

The Stall-function protects the frequency inverter against switch off due to overcurrent in constant operation at fset=factual and at constant output frequency. It is activated with Pn.12 and adjustable in the range of 10…199 % (200 = off) of the rated inverter current. On attaining the adjusted load limit and in dependence on the selected characteristic the frequency is decreased/increased according to the ramp time adjusted in Pn.14 until falling below the overload limit. When the load has fallen below he maximum ramp current, it is accelerated again with the normal ramp time.

Picture 6.7.2.a Principle of constant current limit

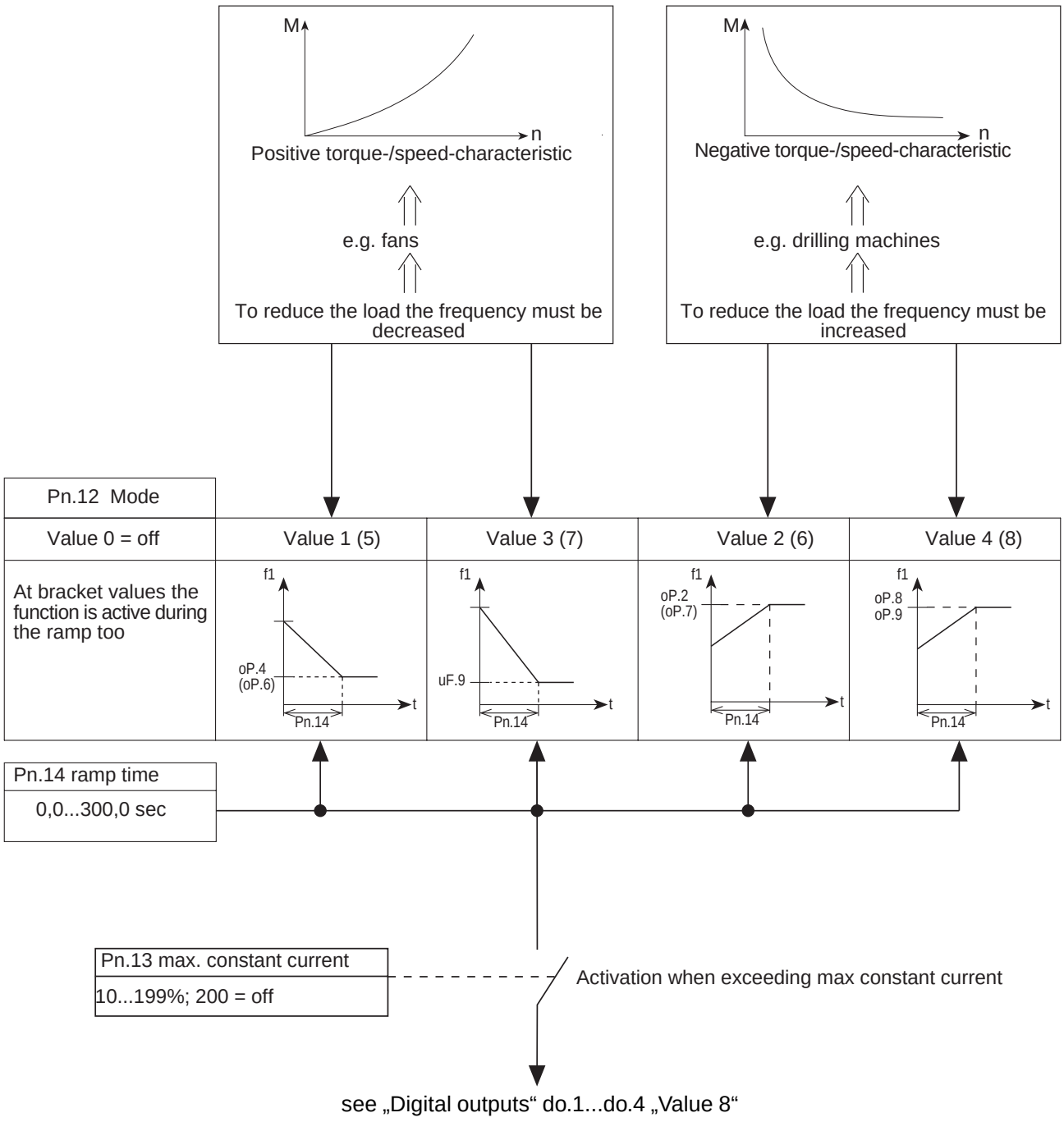

© KEB Antriebstechnik, 1997
All Rights reserved

Picture 6.7.2.b Example for constant current limit

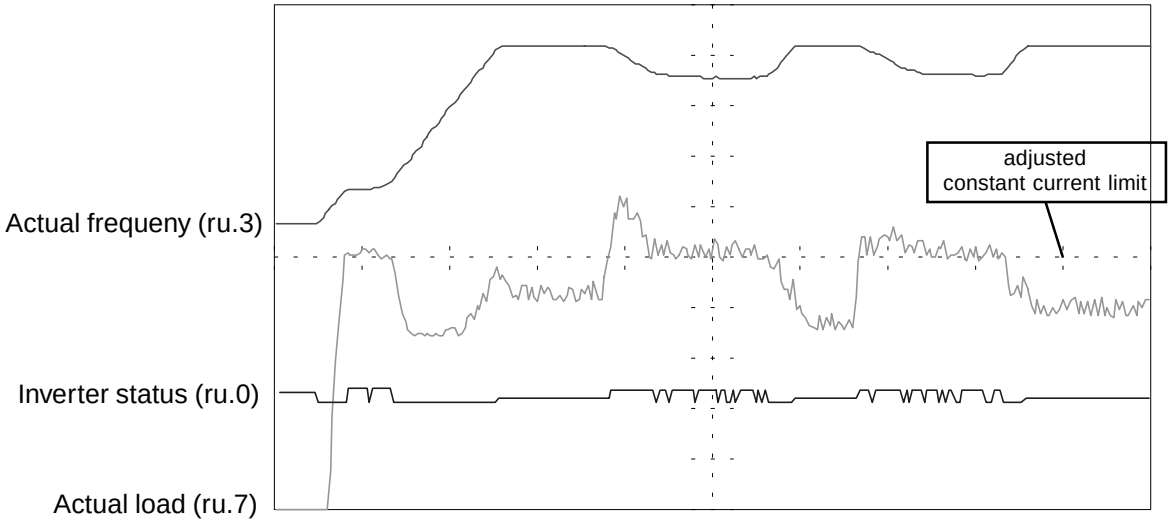

Used Parameters

Param.	Adr.	R/W	PROG.	ENTER	min	max	Step	default	
Pn.12	220Ch	✔	✔	-	0	8	1	-	Bit-coded
Pn.13	220Dh	✔	✔	-	10 %	199 % (200 = oFF)	1 %	200 %	% referring to rated inverter current
Pn.14	220Eh	✔	✔	-	0,00 s	300,00 s	0,01s	10,00 s	-

© KEB Antriebstechnik, 1997
All Rights reserved

6.7.3 Automatic Restart and Speed Search

With the automatic restart the inverter error can be reset automatically. The function can be activated separately for different errors with Pn.0...Pn.2.

! Because of the automatic restart of the machine protective measurements for the operating personnel and the machine must be taken care of.

The function speed search permits the connection of the frequency inverter to a coasting motor. After the function is activated by the selected starting conditions, it searches for the current motor speed and adapts output frequency and voltage in accordance to it. If the synchronization point is found, the inverter accelerates the drive with the adjusted ACC-ramp to the set value.

Picture 6.7.3.a Principle of speed search

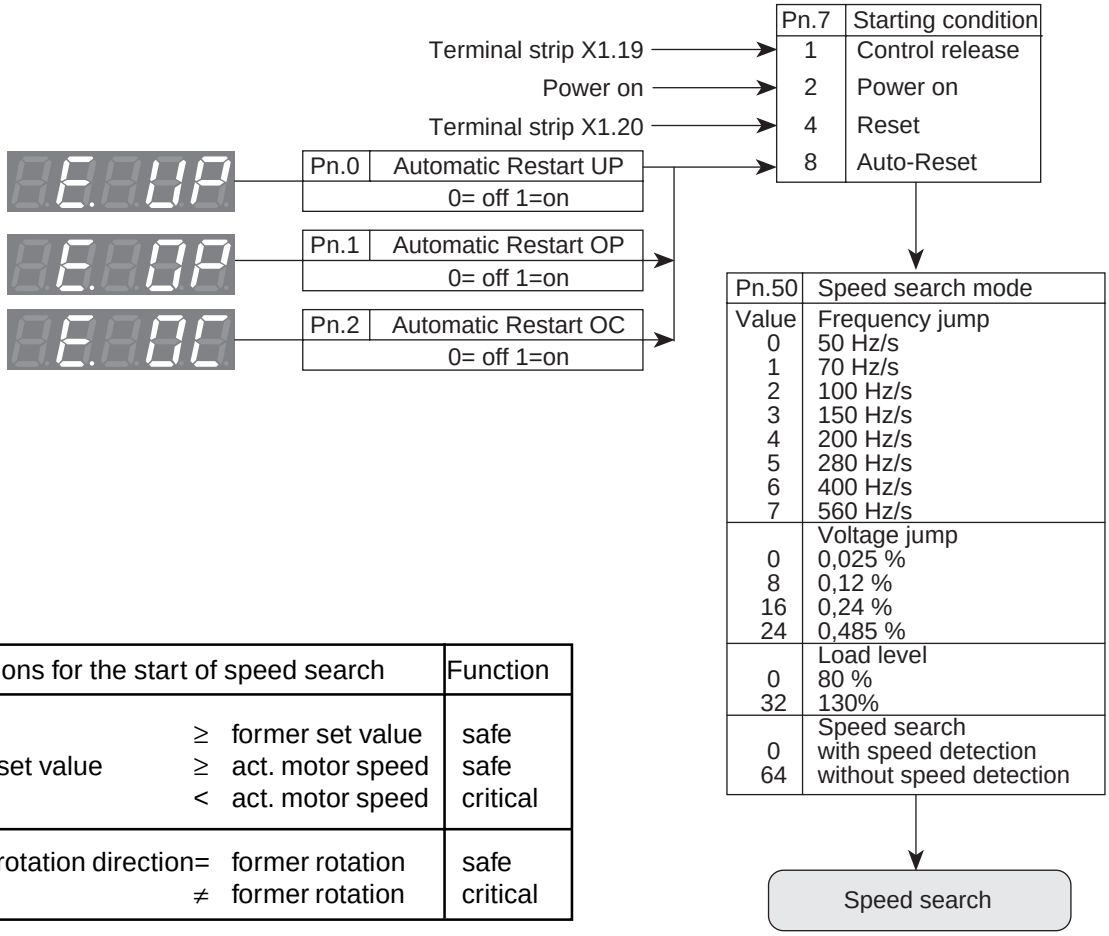

Conditions for the start of speed search			Function
actual set value	≥	former set value	safe
	≥	act. motor speed	safe
	<	act. motor speed	critical
actual rotation direction	=	former rotation	safe
	≠	former rotation	critical

Speed Search Mode Pn.50

The speed search mode defines the frequency and voltage jumps as well as the maximim load with which the function works. Higher values let the function work faster, lower values make the function „smoother“.
The speed search with actual speed detection is only possible with an optional encoder interface. In that case the output frequency is put directly on the measured motor speed. However, the voltage rise takes place as adjusted.

© KEB Antriebstechnik, 1997
All Rights reserved

Picture 6.7.3.b Speed search with „smooth“ adjusted function

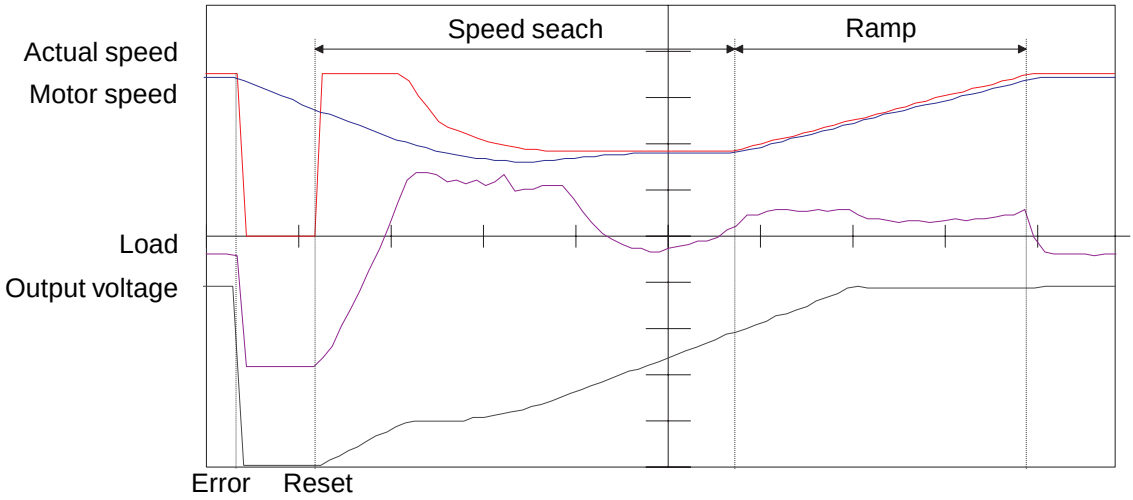

Picture 6.7.3.c Speed search with „fast“ adjusted function

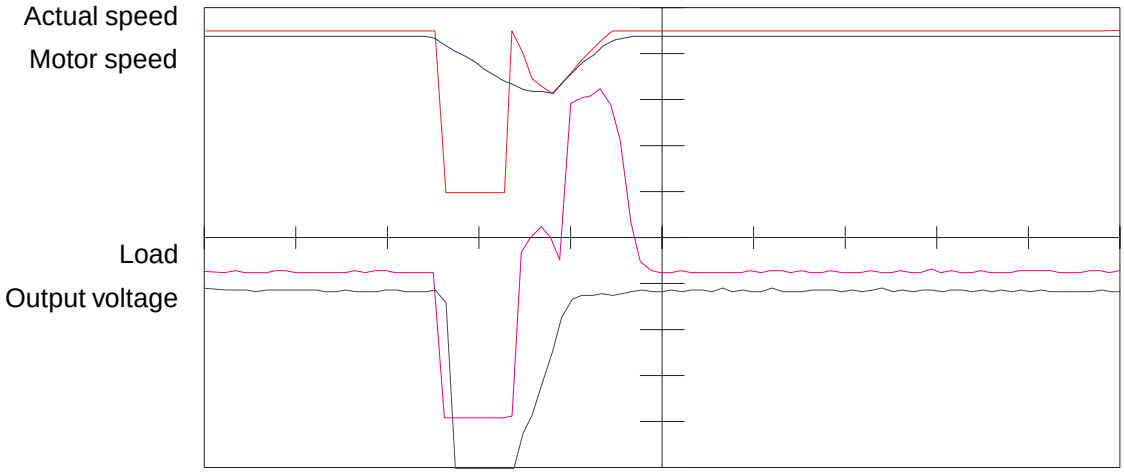

Used Parameters

Param.	Adr.	R/W	PROG.	ENTER	min	max	Step	default	
Pn.0	2200h	✔	-	-	0	1	1	1	-
Pn.1	2201h	✔	-	-	0	1	1	0	-
Pn.2	2202h	✔	-	-	0	1	1	0	-
Pn.7	2207h	✔	✔	-	0	15	1	8	Bit-coded
Pn.50	2232h	✔	-	-	0	127	1	0	Bit-coded

© KEB Antriebstechnik, 1997
All Rights reserved

6.7.4 Electronic Motor Protection

The motor protective function protects the connected motor against thermal desctruction caused by high currents. The function corresponds largely to mechanical motor protective components, additionally the influence of the motor speed on the cooling of the motor is taken into consideration. The load of the motor is calculated from the measured apparent current (ru.9) and the adjusted rated motor current (dr.2).
For motors with separately driven fan or at rated frequency of a self-ventilated motor following tripping times (VDE 0660, Part 104) apply:

1,2	•	I_n	⇒	2 hours
1,5	•	I_n	⇒	2 minutes
2	•	I_n	⇒	1 minute
8	•	I_n	⇒	5 seconds

Picture 6.7.4.a Principle of electronic motor protective function

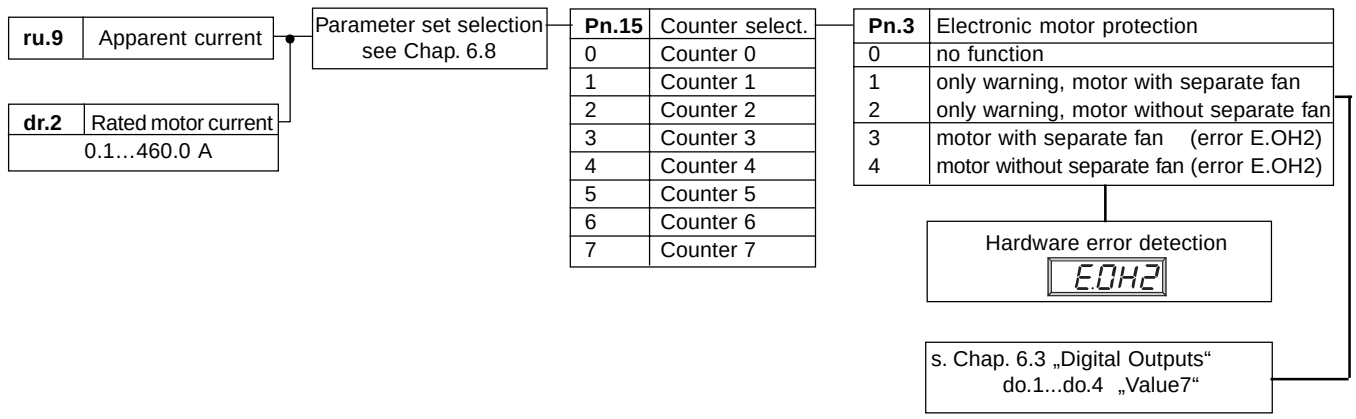

Counter Selection Pn.15

If several motors are operated with one inverter, each motor can be protected individually by selecting different counters (0...7).

Example:- a different counter is assigned to each motor

Enter motor data in the corres-ponding parameter sets!

1. Motor	2. Motor	3. Motor
⇓	⇓	⇓
Counter 0	Counter 1	Counter 2

- this counter is now adjusted in all parameter sets of the corresponding motor

Counter 0=Value „0“			Counter 1=Value„1“	Counter 2=Value „2“	
⇓	⇓	⇓	⇓	⇓	⇓
Set 1	Set 5	Set 0	Set 2	Set 6	Set 3
Adjust following values:	⇓		⇓	⇓	
	0.Pn.15 = 0		2.Pn.15 = 1	3.Pn.15 = 2	
	1.Pn.15 = 0			6.Pn.15 = 2	
	5.Pn.15 = 0				

The counter works only in the active set with the measured value. In all sets that are not active it is counted down. If one counter exceeds the limit, a warning in dependence on Pn.3 is given (do.1...do.4 Value „7“) or the inverter switches off with error E.OH2.

© KEB Antriebstechnik, 1999
All Rights reserved

Picture 6.7.4.b Tripping times of motor protective function

For self-ventilated motors the tripping times decrease with the frequency of the motor (see picture 6.7.4.b). The motor protective function acts integrating, i.e. times with overload on the motor are added, times with underload are substracted. After triggering the motor protective function, the new tripping time is reduced to 1/4 of the specified value, if the motor has not been operated for an appropriate time with underload.

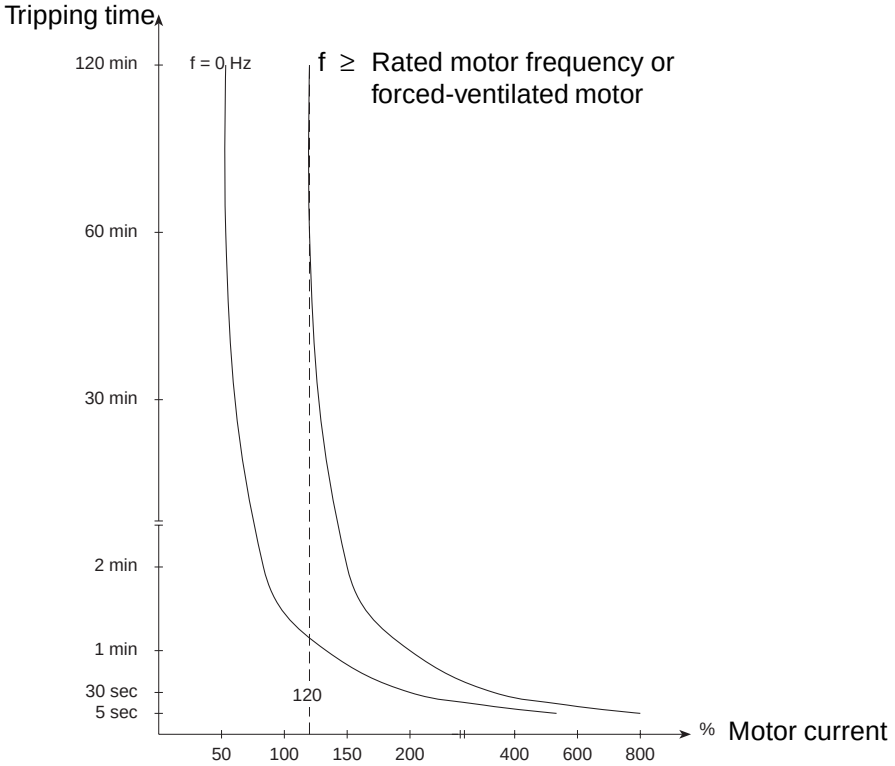

External error control procedure

The KEB COMBIVERT provides another possibilitiy to protect the motor by connecting an external temperature monitoring. Following components can be connected to terminals OH/OH:

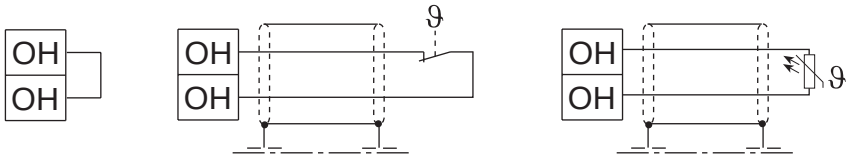

Bridge when no external evaluation takes place

Thermo contact (NC contact)

Temperature sensor (PTC) 1650Ω...4kΩ tripping resistance 750Ω...1650Ω reset resistance

E.dOH Switch-off delay (Pn.16)

If the thermo contact opens or the temperature sensor rises via the operating initial resistance, the internal switching condition 6 is set. With do.1...do.4 a digital output can be set (see Chap. 6.3). After expiration of an adjustable time (Pn.16) , the inverter switches off with error E.dOH.

Used Parameters

Param.	Adr.	R/W	PROG.	ENTER	min	max	Step	default	
Pn.3	2203h	✔	✔	-	0	4	1	0	-
Pn.15	220Fh	✔	✔	-	0	7	1	0	-
Pn.16	2210h	✔	-	-	0	120s	1s	10s	-
dr.2	2402h	✔	✔	-	0,0	460,0A	0,1A	LTK	depending on power circuit
ru.9	2009h	-	-	-	0,0	460,0A	0,1A	-	-

© KEB Antriebstechnik, 1999 All Rights reserved

6.7.5 Dead Time Compensation (uF.17)

The dead time compensation optimizes the switch-off times of the power module semiconductors. Thus the motor posseses a better smooth running in the lower speed range (especially at low carrier frequency).

! When using sinusoidal filters Plus the dead time compensation must be disabled. In case of poor supply connection or at IT-systems it may be necessary to switch off the dead time compenstion.

6.7.6 Base-Block Time

Is a time during which the power modules of the inverter are blocked. This is, for example, necessary before triggering the dc-brake to allow the de-excitation of the motor.

1. Introduction

2. Summary

3. Hardware

4. Operation

5. Parameter

6. Functions

7. Start-up

8. Special Operation

9. Error Assistance

10. Project Planning

11. Networks

12. Applications

13. Annex

6.1 Operating and Appliance Display

6.2 Analog In- and Outputs

6.3 Digital In- and Outputs

6.4 Set Value and Ramp Adjustment

6.5 Voltage/Frequency (U/f) Characteristic

6.6 Motor Presetting

6.7 Keep on Running Functions

6.8 Parameter Sets

6.9 Special Functions

6.10 Encoder Interface

6.11 PI-Controller

6.12 CP-Parameter Definition

6.8.1 Non-programmable Parameters 3
6.8.2 Copying of Parameter Sets 3
6.8.3 Selection of Parameter Sets ... 4
6.8.4 Locking of Parameter Sets 6
6.8.5 Parameter Set ON and OFF Delay 4
6.8.8 Used Parameters 6

6.8 Parameter Sets

The KEB COMBIVERT has 8 parameter sets (0…7), i.e. all programmable parameters exist 8-times in the inverter and can be assigned with different values independent of each other. Thus it is possible for example to operate 8 different motors on one inverter, that means that the motor dates of each motor are in a separate set. Since many of the parameters in the parameter sets have the same values, it would be quite troublesome to adjust each parameter in each set individually. The following section describes how complete parameter sets are copied, locked, selected and how the inverter is initialized again.

6.8.1 Non-programmable Parameters

Certain parameters are non-programmable, since their value must be the same in all sets (e.g. bus address or baud rate). To identify these parameters at once the parameter set number is missing in the parameter identification. **The same value always applies to all non-programmable parameters independent of the selected parameter set!**

6.8.2 Copying of Parameter Sets (Fr.0, Fr.1, Fr.9)

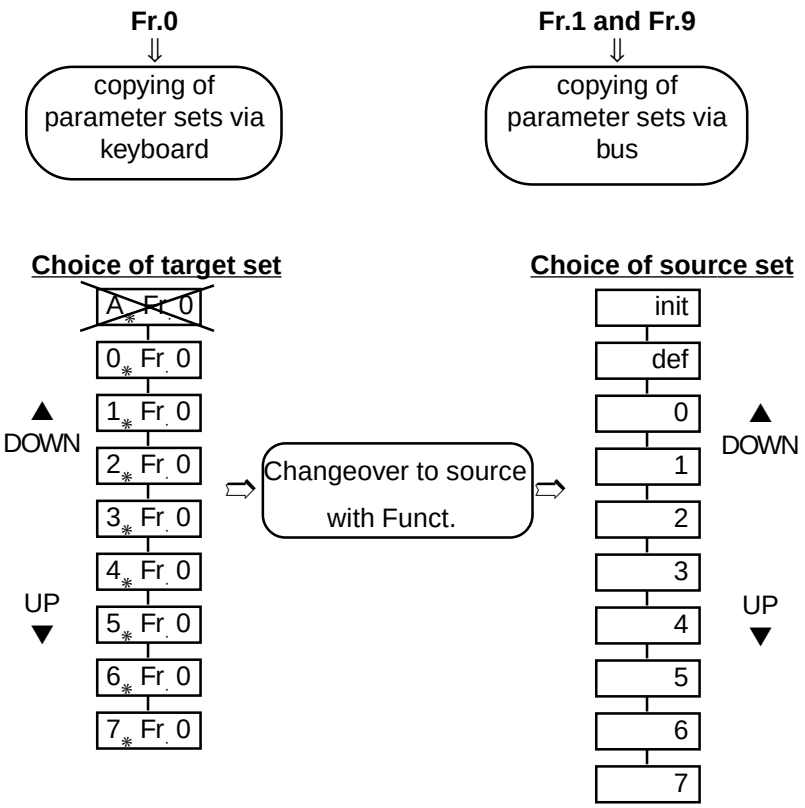

Adjustment of source and target set via keyboard

! By loading the factory setting all definitions defined by the machine builder are reset! This can include the terminal assignment, set changeover or operating conditions. Prior to loading the initialization or default set make sure that no unintended operating conditions occur.

At blinking dot behind the parameter set number the target set 0…7 is adjusted with the keys UP/DOWN. During copying the active (A) parameter set may not be adjusted as target set If the target set is > 0, only the programmable parameters are overwritten!

With the keys UP/DOWN the initialization set, default set or set 0…7 are choosen.

- At „init“ all parameters in every set are overwritten with the factory setting.
- At „def“ the target set is overwritten with the factory setting.
- At „0...7“ the selected parameter set is copied into the target set. If the set is > 0, only the programmable parameters are copied into the target set.

Starting of copying

If the source set is selected, the copying process can be started with „ENTER“. If the copying process has been sucessfully completed the display shows „Pass“, otherwise the message „nco“ (no copy) appears.

Error message „nco“

If error message „nco“ is displayed, it may have following reasons:

Reason	Remedy
Attempt to copy the default set (def) into the active set	Open the control release or activate another parameter set.
During initialization (init) the control release was not dsabled.	Open control release or trigger error.
Source and target set are identical.	Change either source or target set.
The current set (A) is selected as target set.	Select valid value (0...7) as target set.

Adjustment of source and target set via bus (Fr.1 / Fr.9)

At bus operation two parameters are responsible for the copying of parameter sets. Fr.9 defines the target set. Fr.1 defines the source parameter set and starts the copying process. These parameters are not visible via keyboard.

6.8.3 Selection of Parameter Sets

Picture 6.8.3.a Principle of parameter set selection

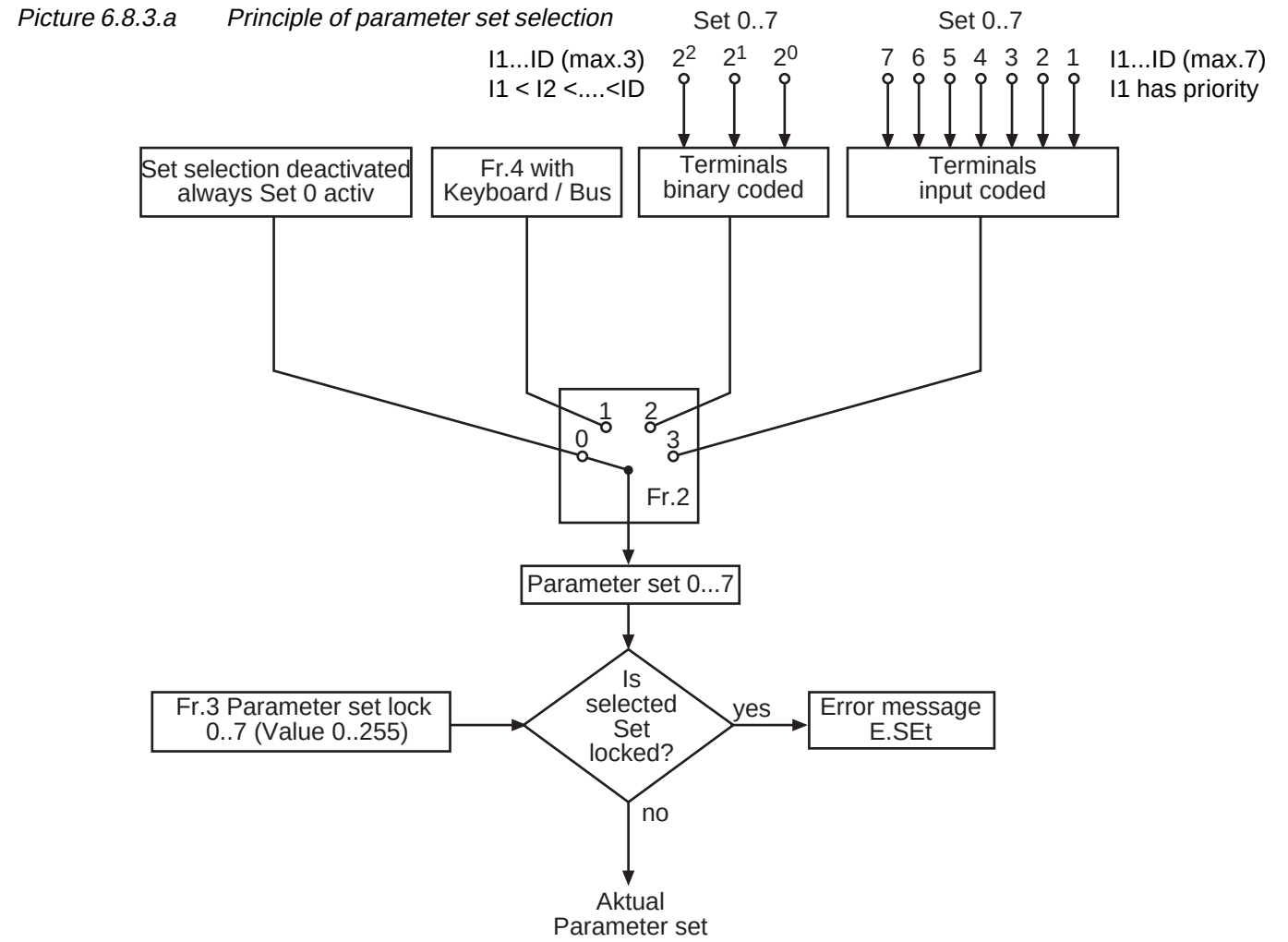

As shown in picture 6.8.3, with Fr.2 it is determined whether the parameter set selection is done via keyboard/bus (fr.4) or via terminal strip or disabled.

Fr.2 Source parameter set

Fr.2	Function
0	Set selection deactivated, set 0 always active
1	Set selection via keyboard/bus with Fr.4
2	Set selection binary-coded via terminal strip
3	Set selection input-coded via terminal strip

Fr.4 Presetting parameter set

This parameter can be written via keyboard as well as via bus. The desired parameter set (0…7) is entered directly as value.

The adjustment via terminal strip can be made binary-coded or input-coded. The inputs are defined for set selection with parameters di.3…di.10 „Value 1“ .

Binary-coded set selection

At binary-coded set selection
- maximal 3 of the internal or external inputs may be programmed for set selection (2^3=8 sets) within one parameter set to avoid set selection errors.
- the significance of the inputs programmed for set selection rises (I1 < I2 < I3 < I4 < IA < IB < IC < ID)

Example 1: With 3 inputs (I1, I3 and I4) set 0…8 shall be selected.

1.) Adjust parameter di.3, di.5 and di.6 to value „1“
2.) Parameters di.4, di.7...di.10 must be set to ≠ 1
3.) Adjust Fr.2 to value „2“ (set selection binary-coded via terminal strip)

Picture 6.8.3.b Binary-coded parameter set selection

I4	I3	I1	Input
2^2	2^1	2^0	Set
0	0	0	0
0	0	1	1
0	2	0	2
0	2	1	3
4	0	0	4
4	0	1	5
4	2	0	6
4	2	1	7

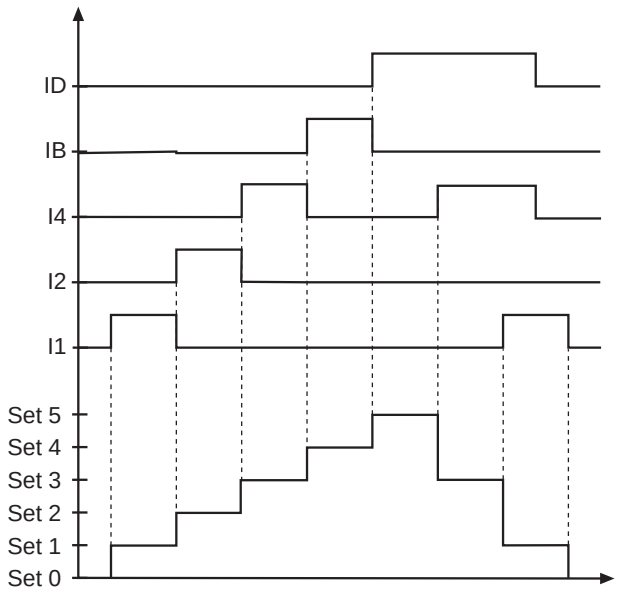

Input-coded set selection

At input-coded set selection
- maximal 7 of the internal or external inputs may be programmed for set selection (0…7 sets) within one parameter set to avoid set selection errors.
- the lowest of the selected inputs has priority (I1 > I2 > I3 > I4 > IA > IB > IC > ID)

Eample1: With 5 inputs (I1, I2, I4, IB and ID) set 0…5 shall be selected

1.) Adjust parameter di.3, di.4, di.6, di.8 and di.10 to value „1“
2.) Parameter di.5, di.7 and di.9 must be set to ≠ 1
3.) Adjust Fr.2 to vlaue „3“ (set selection input-coded via terminal strip)

Picture 6.8.3.c Input-coded parameter set selection

ID	IB	I4	I2	I1	Set
0	0	0	0	0	0
0	0	0	0	1	1
0	0	0	2	0	2
0	0	3	0	0	3
0	4	0	0	0	4
5	0	0	0	0	5
5	0	3	0	0	3
5	0	3	0	1	1

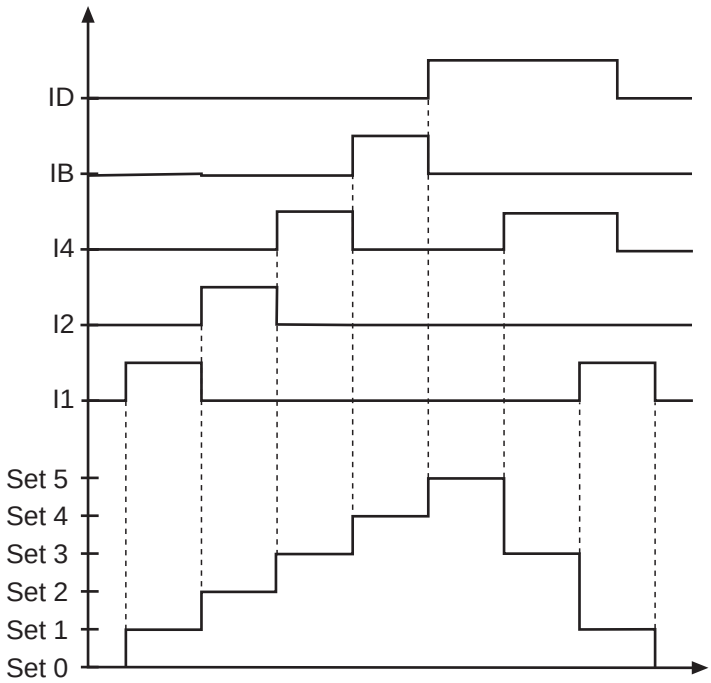

6.8.4 Locking of Parameter Sets

Parameter sets that shall not or may not be selected can be locked with Fr.3. If the locked set is selected, the inverter switches off with set selection error (E.SEt).

Fr.3 Parameter set lock

Value	Locked set	Example
1	0	-
2	1	-
4	2	4
8	3	-
16	4	-
32	5	32
64	6	-
128	7	-
Set 2 and set 5 locked		Sum 36

© KEB Antriebstechnik, 1997
All Rights reserved

6.8.5 Parameter Set ON and OFF Delay (Fr.5, Fr.6)

With these parameters the time is adjusted

- by which the activation of a new set shall be delayed (Fr.5)
- by which the deactivation of a set shall be delayed (Fr.6)

At set changeover the turn-off time of the old set and the turn-on time of the new set are added up.

Picture 6.8.5 ON and OFF delay

Example		
Set	Fr.5	Fr.6
0	0 s	0 s
1	2 s	0 s
2	0 s	1 s
3	2 s	2 s

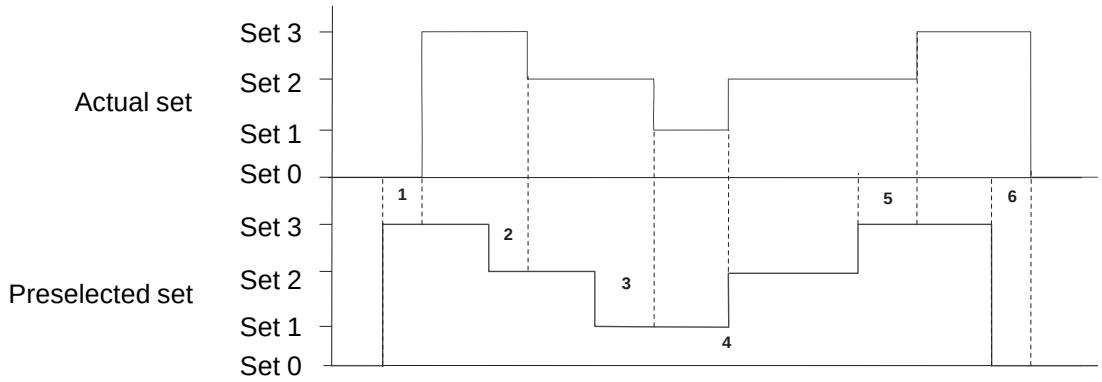

1: ON delay set 3 of 2s
2: OFF delay set 3 of 2s
3: OFF delay of set 2 of 1s + ON delay of set 1 of 2 s
4: immediate changeover as no delay-time is adjusted
5: OFF delay set 2 of 1s + ON delay of set 3 of 2s
6: OFF delay of set 3 of 2s

6.8.6 Used Parameters

Param.	Adr.	R/W	PROG.	ENTER	min	max	Step	default	
Fr.0	2700h	✔	✔	✔	-2	7	1	0	not via bus
Fr.1	2701h	✔	-	-	-2	7	1	0	not via keyboard
Fr.2	2702h	✔	-	✔	0	3	1	0	-
Fr.3	2703h	✔	-	✔	0	255	1	0	-
Fr.4	2704h	✔	-	✔	0	7	1	0	-
Fr.5	2705h	✔	✔	-	0	2,55 s	0,01 s	0	-
Fr.6	2706h	✔	✔	-	0	2,55 s	0,01 s	0	-
Fr.9	2709h	✔	-	-	-1	7	1	0	not via keyboard

© KEB Antriebstechnik, 1997
All Rights reserved

1. Introduction

2. Summary

3. Hardware

4. Operation

5. Parameter

6. Functions

7. Start-up

8. Special Operation

9. Errror Assistance

10. Project Planning

11. Networks

12. Applications

13. Annex

6.1 Operating and Appliance Displays

6.2 Analog In- and Outputs

6.3 Digital In- and Outputs

6.4 Set Value and Ramp Adjustment

6.5 Voltage/Frequency (U/f) Characteristic

6.6 Motor Presetting

6.7 Keep on Running Functions

6.8 Parameter Sets

6.9 Special Functions

6.10 Speed Measurements

6.11 Regulated Operation

6.12 CP-Parameter definition

6.9.1 DC-Braking 3
6.9.2 Energy saving function 5
6.9.3 Power Off function 7
6.9.4 Motor potentiometer 13
6.9.5 Timer and counter 17
6.9.6 Braking control 19
6.9.7 Unit conversion 23

© KEB Antriebstechnik, 1997
All rights reserved

6.9 Special Functions

The following section shall facilitate the adjustment and programming of special functions.

6.9.1 DC-Brake

At DC-braking the motor is not decelerated by the ramp. The fast braking occurs through DC voltage, which is given on the motor winding.
Between the activation and the triggering of the DC-braking a time constant called Base-Block-Time (bbL) of 150…1500 ms (depending on the motor size) is required. It serves for the protection of the power modules during the motor de-excitation time. The trigger for the DC-braking is adjusted with Pn.8. Corresponding to the adjusted mode a frequency can be adjusted with Pn.9, at which the DC-Brake engages.Pn.11 determines the time of braking. With Pn.10 the maximum braking voltage is adjusted. For that the brake controllers are designed for a 1:1 dimensioning of inverter to motor, consequently the maximum braking voltage must be reduced in case of deviating dimensioning in order to avoid an overheating of the motor. At large capacities the maximum braking voltage can lead to overcurrent errors (OC). In that case reduce Pn.10.

Fig. 6.9.1 Principle of DC-Brake

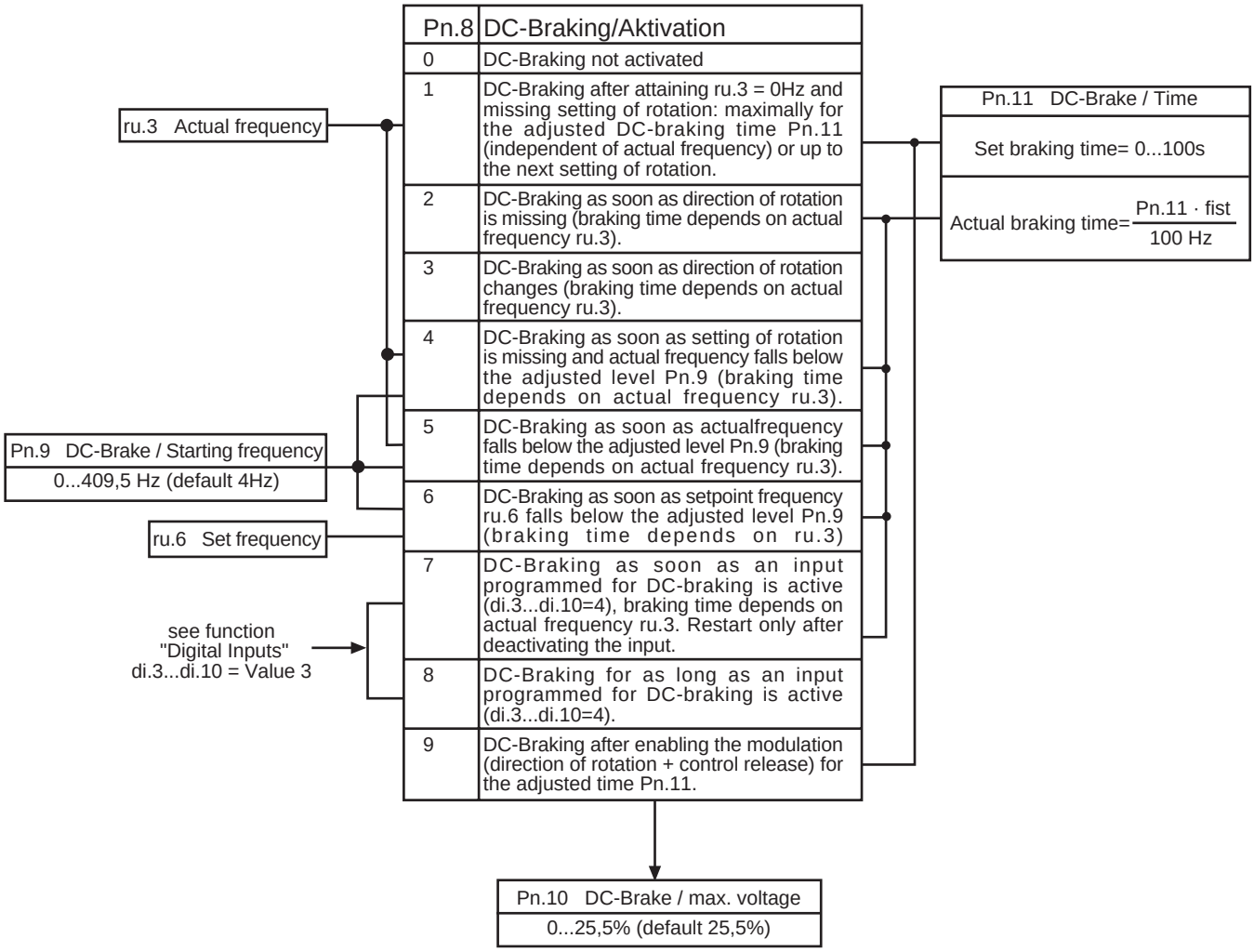

© KEB Antriebstechnik, 1997
All Rights reserved

Survey of the Different Braking Modes

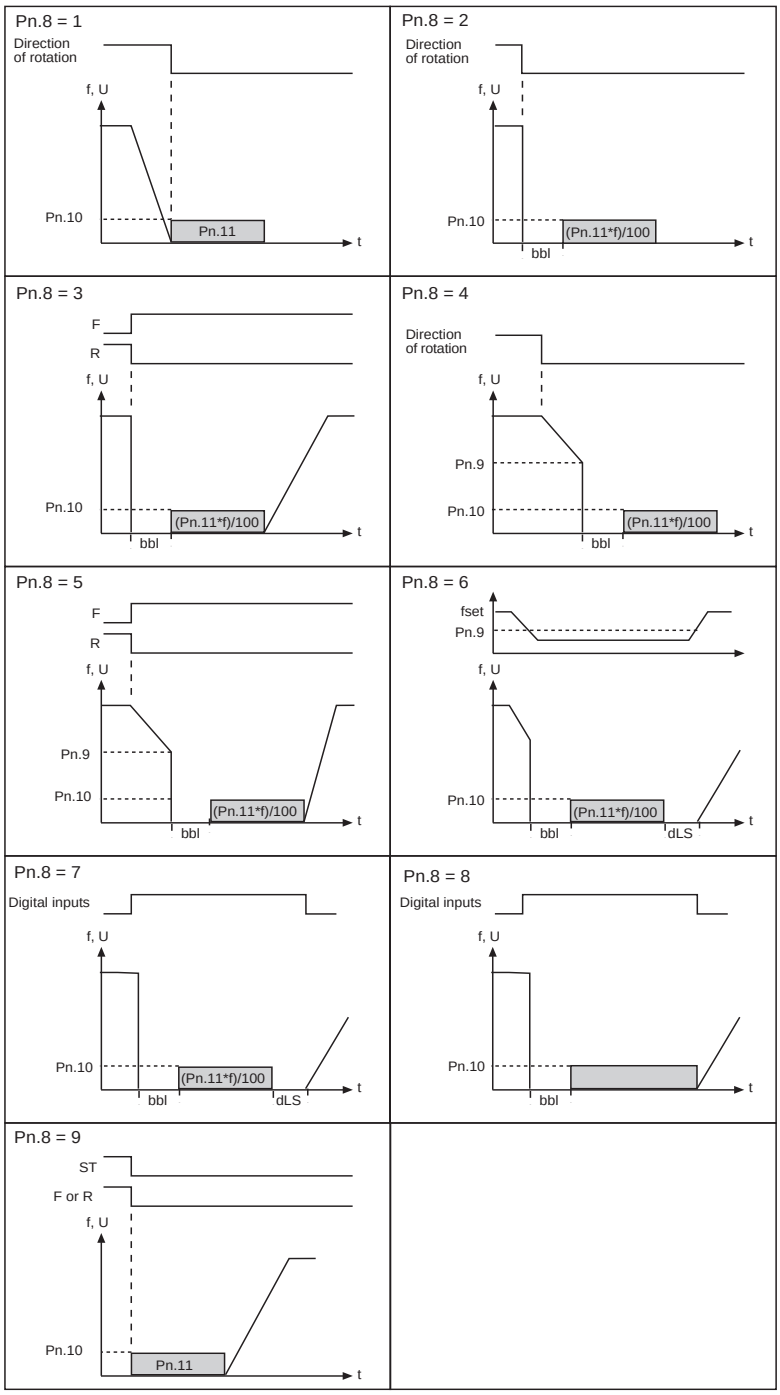

Used Parameters

Param.	Adr.	R/W	PROG.	ENTER	min	max	Step	default	
Pn.8	2208h	✔	✔	-	0	9	1	7	-
Pn.9	2209h	✔	✔	-	0	409,5875 Hz	0,0125 Hz	4 Hz	-
Pn.10	220Ah	✔	✔	-	0	25,5 %	0,1 %	25,5 %	-
Pn.11	220Bh	✔	✔	-	0	100,00 s	0,01 s	10,00 s	-

© KEB Antriebstechnik, 1997
All Rights reserved

6.9.2 Energy Saving Function

With the energy saving function a lowering or raising of the actual output voltage can take place. Corresponding to the activation conditions defined with uF.6 the valid voltage according to the V/Hz-characteristic is changed proportionally by the energy saving level (uF.7).
Even at a value > 100 % the maximum output voltage cannot become higher than the input voltage. The function is used for example in cyclic executed load/no-load applications. During the no-load phase the speed is maintained, but by lowering the voltage energy is saved.

uF.7	Energy saving function / Level
	30…130 %

progr. inputs (di.3…di.10) value 4 >

uF.6	Energy saving function / Activation
0	function off
1	generally on
2	at actual frequency = setpoint frequency
3	activation through programmable inputs
4	generally at rotation forward
5	generally at rotation reverse
6	rotation forward and actual freq. = setpoint freq.
7	rotation revers and actual freq. = setpoint freq.

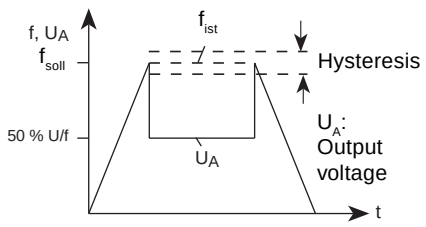

Example: uF.6 = 2, uF.7 = 50 %

Used Parameters

Param.	Adr.	R/W	PROG.	ENTER	min	max	Step	default	
di.3 : di.10	2903h : 290Ah	✔	✔	✔	0	16	1	-	adjust value 4
uF.6	2306h	✔	✔	-	0	7	1	3	-
uF.7	2307h	✔	✔	-	0	150%	1%	70%	-

© KEB Antriebstechnik, 1997
All Rights reserved

6.9.3 Power-Off Function

It is the task of the Power-Off function (e.g. in case of power failure) to ensure a ***controlled*** deceleration of the drive until standstill. The kinetic energy of the rotating drive is used to support the inverter intermediate circuit voltage. Thus the inverter remains in operation and the drive is decelerated in a controlled manner.
Especially for parallel running drives (e.g. in textile machines) the uncontrolled coasting of the motors and the consequences resulting from it (thread breakage etc.) are avoided.

Fig. 6.9.3.a Triggering of the Power-Off Function

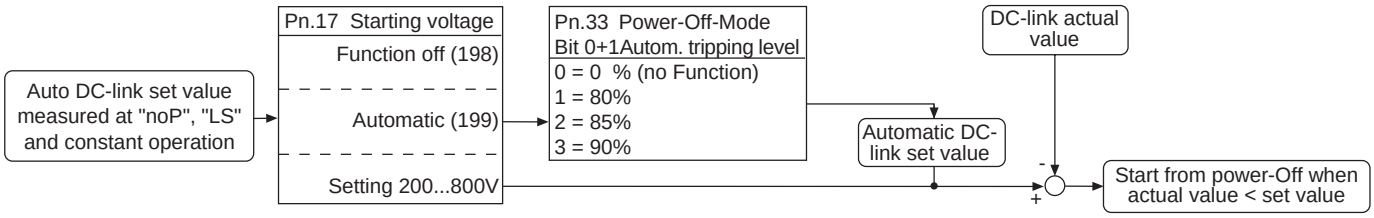

6

Triggering of Power-Off Function Funktion

Pn.17 determines how the Power-Off function if triggered. Is Pn.18 = „0“ and Pn.42 = „199“ then the starting voltage is also the setpoint value for the DC-link control. With activated Power-Off function this setting leads to an immediate restart upon voltage recovery. All other settings result in a deceleration to standstill.

Starting Voltage (Pn.17)

198	Power-Off Function deactivated
199	At automatic starting voltage the intermediate circuit voltage is measured in different operating conditions. The actual starting voltage is determined by Pn.33, which adjusts the starting voltage proportional to the measured value (see next page).
200...800	Manual adjustment of the starting voltage in volt. To ensure a save operation the adjusted starting voltage must be at least 50V above the UP level (UP: 400V-class = 360V; 200V-class = 210 V DC).

The thus adjusted starting voltage is now continuously compared with the DC-link actual value. If the actual value falls below the setpoint value, the Power-Off function is activated.

Fig. 6.9.3.b Frequency jump for generatoric operation

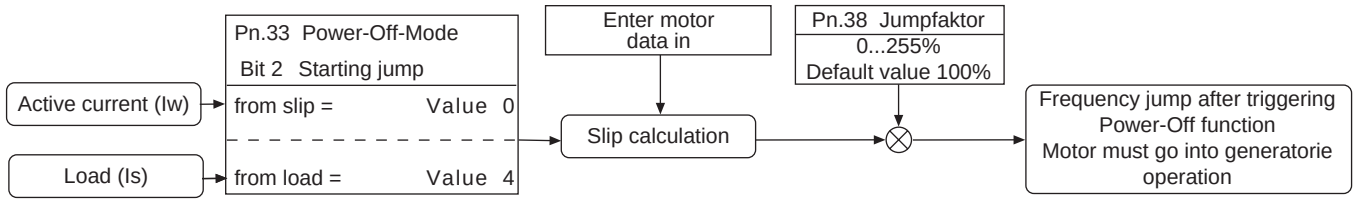

Generatoric Operation

Enter motor data in the dr-Parameters !

First of all the drive must be put into generatoric operation so that the energy can be fed back into the intermediate circuit. This happens by making a frequency jump, so that the speed of the drive is larger than the output rotary field speed of the inverter. In order for a correct automatic calculation it is a must to enter the motor data in the dr-parameters first.

Power-Off-Mode (Pn.33)

Pn.33	Bit	6	5	4	3	**2**	1	0	Function
	Value	64	32	16	8	**4**	2	1	
automtatic tripping voltage at Pn.17=199		x	x	x	x	x	0	0	0% (function off)
		x	x	x	x	x	0	1	80% of measured value
		x	x	x	x	x	1	0	85% of measured value
		x	x	x	x	x	1	1	90% of measured value
starting jump		x	x	x	x	0	x	x	from slip (Standard)
		x	x	x	x	1	x	x	from load
behaviour at voltage recovery		x	x	x	0	x	x	x	immediate restart, if f≥Pn.19
		x	x	x	1	x	x	x	PLS
slip control		x	x	0	x	x	x	x	without speed detection
		x	x	1	x	x	x	x	with actual speed detection
increased setpoint value		x	0	x	x	x	x	x	at Pn.42>199 immediate
		x	1	x	x	x	x	x	at Pn.42>199 when f<Pn.19
Restart at 0 Hz		0	x	x	x	x	x	x	off — with control if Pn.42>199 or Pn.18>0
		1	x	x	x	x	x	x	on

Starting Jump (Pn.33 Bit 2)

Parameter Pn.33 bit 2 determines whether the starting jump is calculated from the slip (active current) or from the load. The standard setting is the slip, however, in case of high harmonics on the output current it can lead to wrong values. In that case the starting jump can be calculated from the load.

Slip control (Pn.33 Bit 4)

At activated bit 4 the real slip is determined by way of the recorded actual speed. It is multiplied with pn.38 and outputted as starting jump. Subsequently only the slip is controlled, i.e. the output frequency can deviate from the current actual rotary field frequency only by the pull-out slip of the motor. This mode of operation is to be used with installed speed measurement, since the results are clearly better.

Increased setpoint value (Pn.33 Bit 5)

If bit 5 is activated the DC-link setpoint value equals the switch-off level (Pn.17) until the output frequency falls below the restart frequency (Pn.19). Up to this point Power Off is left upon voltage recovery. After the switchover of the setpoint value a controlled deceleration to 0 Hz takes place (Attention: inverter is still modulation → motor over heat). Power Off is left only by deactivating the control release.

Jump Factor (Pn.38)

By means of the jump factor the automatically determined starting jump can be adapted to the respective application.
In case the jump factor is too low, the inverter trips to UP!
In case the jump factor is too high, the inverter runs into the hardware current limitation. The control cannot work correctly, thus causing a wrong calculation of the active current!

Fig. 6.9.3.c Adjustment of Jump Factor

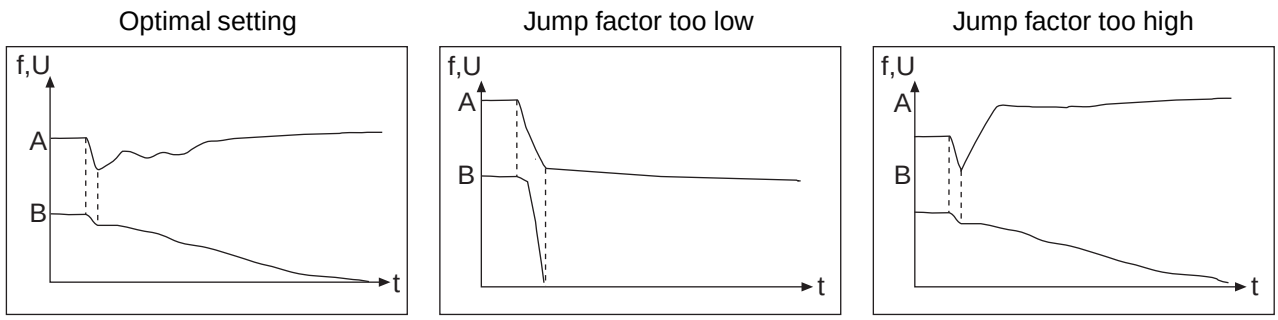

A: DC-lin voltage B: Output frequency

Fig. 6.9.3.d Power-Off Control

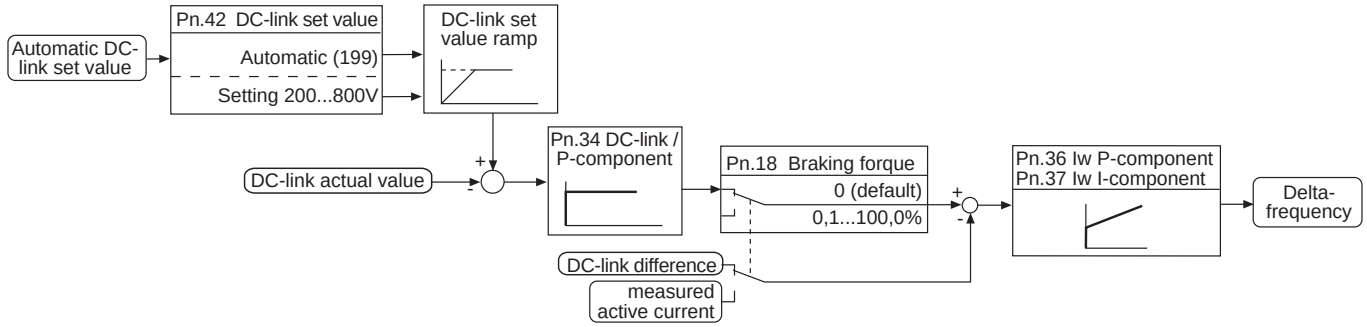

Power-Off Control

1. Buffering of short-time power failures:

The drive shall be kept running for as long as possible with the available energy, in order to continue the operation upon voltage recovery. This is particularly suited for large flywheel masses. The DC-link voltage is the controlled variable onto which it is regulated with the setpoint value as manipulated variable.

2. Emergency Stop:

The drive shall be brought to a standstill before the inverter switches off. The active current is the control variable onto which it is regulated with the setpoint value as manipulated variable

6

First the setpoint DC-link voltage is adjusted with Pn.42. This is the value with which the regulation takes place.

DC-link Setpoint Value (Pn.42)

199	At this setting the DC-link setpoint value is equal to the tripping level Pn. 17. An immediate restart upon voltage recovery is possible.
200...800	Manual setting of the DC-link setpoint voltage in volt. At this setting the drive decelerates even upon voltage recovery to standstill (dependent on Pn.33 Bit 5). To ensure a save operation the internal value is limited. The value of the DC-link voltage for normal operation plus approx. 50V adjusts itself as minimum value. If a braking resistor is connected the adjusted value may not be above the operating point of the braking transistor, since the controller would not work in that case (operating point 200V-class: 370V; 400V-class: 740V).

DC-link P-component (Pn.34)

To adapt the drive individually to the application, the proportional coupling factor of the DC-link voltage controller can be adjusted. In most cases the standard setting will function. However, if overshootings occur or stalling of the motor the value must be decreased.

Active Current Control P-component (Pn.36) I-component (Pn.37)

With the active current control Pn.36 and Pn.37 an adaption to the application can be made, where the standard setting would not be sufficient. For such cases no adjustment aid can be given since it strongly depends on the application. But in most cases the controller work sufficiently with the standard setting and a change is not needed.

Braking Torque (Pn.18)

Serves for the adjustment of the braking torque when the drive shall be decelerated quickly in case of power failure. For it a braking module is required.

0	At this setting the DC-link control is active.
0,1...100,0%	Manual setting of setpoint value for the active current control. The DC-link control is deactivated at this setting.

Fig. 6.9.3.e Behaviour at Voltage Recovery

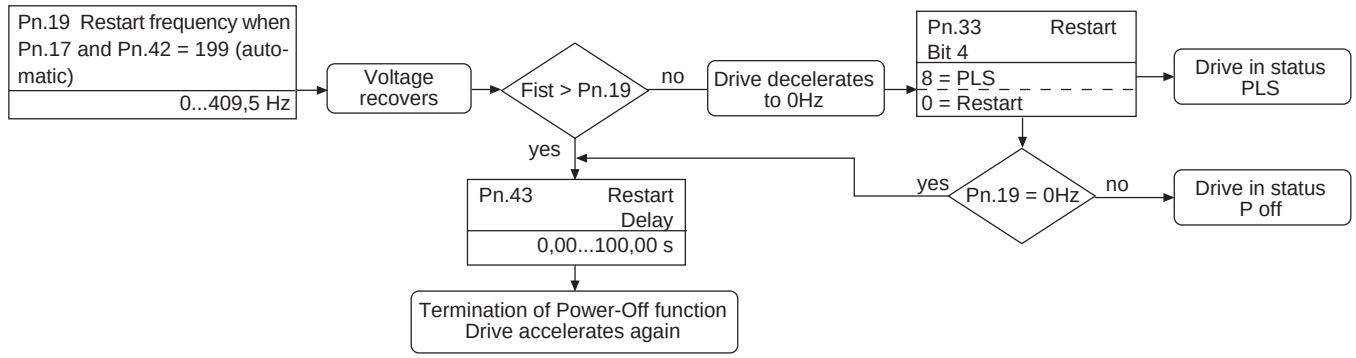

Behaviour at Voltage Recovery

The following parameters influence the behaviour of the inverter when the mains voltage returns during the Power-Off function.

Restart Frequency (Pn.19)

Only when parameter Pn.17 and Pn.42 are set to „199“ (automatic) the inverter can restart at voltage recovery. Depending on the application the restart may be sensible only up to a certain frequency. This frequency is adjusted in Pn.19. If the mains voltage returns before this adjusted frequency is attained, the inverter restarts after the expiration of the adjusted restart delay Pn.43 (if ajdusted). Otherwise the drive is decelerated to standstill.

Restart (Pn.33 Bit3)

Bit 3 of Pn.33 determines the behaviour of the drive on attaining 0 Hz.

- If bit 3 is set (see page 8) the modulation is deactivated and the inverter is in status „PLS“. Resetting by opening the control release or reset.
- If bit 3 is not set
  - and Pn.19 = 0 Hz the inverter restarts on attaining 0 Hz and after expiration of the restart delay Pn.43 (if adjusted).
  - and Pn.19 <> 0 Hz the inverter modulates with the adjusted boost and is in status „POFF“ (Attention: Motor over heat).

  Resetting by opening the control release.

Restart Delay (Pn.43)

After voltage recovery or attaining of 0 Hz the actual frequency for the time adjusted here is not changed. The Power-Off function is left afterwards. If the drive is accelerated directly after voltage recovery higher currents occur than at acceleration from standstill or constant operation. For this reason the drive may reach the hardware current limit and may possibly stall. During the time adjusted in Pn.43 the output frequency is kept constant before the Power-Off function is left. In a way the drive is then in constant operation before accelerating.
Moreover, the adjustment of different times at several machines helps to prevent that the mains immediately breaks down again when several machines are accelerated simultaneously.

Buffering of short-time Power Failures

Parameter	Setting	Remarks
Pn.17	199 (Auto)	automatic adaption to starting voltage even at mains fluctuations
Pn.33	2 (Bit 0 +1)	starting voltage = 85 % of DC-link voltage during normal operation
Pn.41	199 (Auto)	setpoint value DC-link voltage = starting voltage (Pn.17)
Pn.18	0 (Uzk-Mode)	DC-link voltage control activated

Emergency Stop with Braking Module

Parameter	Setting	Remarks
Pn.17	199 (Auto)	automatic adaption of starting voltage even at mains fluctuations
Pn.33	2 (Bit 0 +1)	starting voltage = 85 % of DC-link voltage during normal operation
Pn.18	100%	DC-lnk voltage control deactivated; the drive is decelerated as quickly as possible

Emergency Stop without Braking Module

Parameter	Setting	Remarks
Pn.17	199 (Auto)	automatic adaption of starting voltage even at mains fluctuations
Pn.33	2 (Bit 0 +1)	starting voltage = 85 % of DC-link voltage during normal operation
Pn.18	0 (Uzk-Mode)	DC-link voltage control activated
Pn.42	> 199	adjustment of desired setpoint value

6

Used Parameters

Param.	Adr.	R/W	PROG.	ENTER	min	max	Step	default	
Pn.17	2211h	✔	-	-	198, 199, 200	800 V	1	198 (off)	198:off; 199:auto
Pn.18	2212h	✔	-	-	0; 0,1	100 %	0,1	0	0: UZK-Mode
Pn.19	2213h	✔	-	-	0	409,5875 Hz	0,0125	0 Hz	-
Pn.33	2221h	✔	-	-	0	63	1	2	bitcodiert
Pn.34	2222h	✔	-	-	0	2000	1	512	-
Pn.36	2224h	✔	-	-	0	2000	1	50	-
Pn.37	2225h	✔	-	-	0	2000	1	50	-
Pn.38	2226h	✔	-	-	0	255 %	1 %	100 %	-
Pn.42	222Ah	✔	-	-	199; 200	800 V	1	199	199: auto
Pn.43	222Bh	✔	-	-	0	100,00 s	0,01 s	0 s	-

6.9.4 Motor Potentiometer Function

This function simulates a mechanic motor potentiometer. Via two keys the motor potentiometer value can be increased or decreased.

Fig. 6.9.4 Motor Potentiometer Function

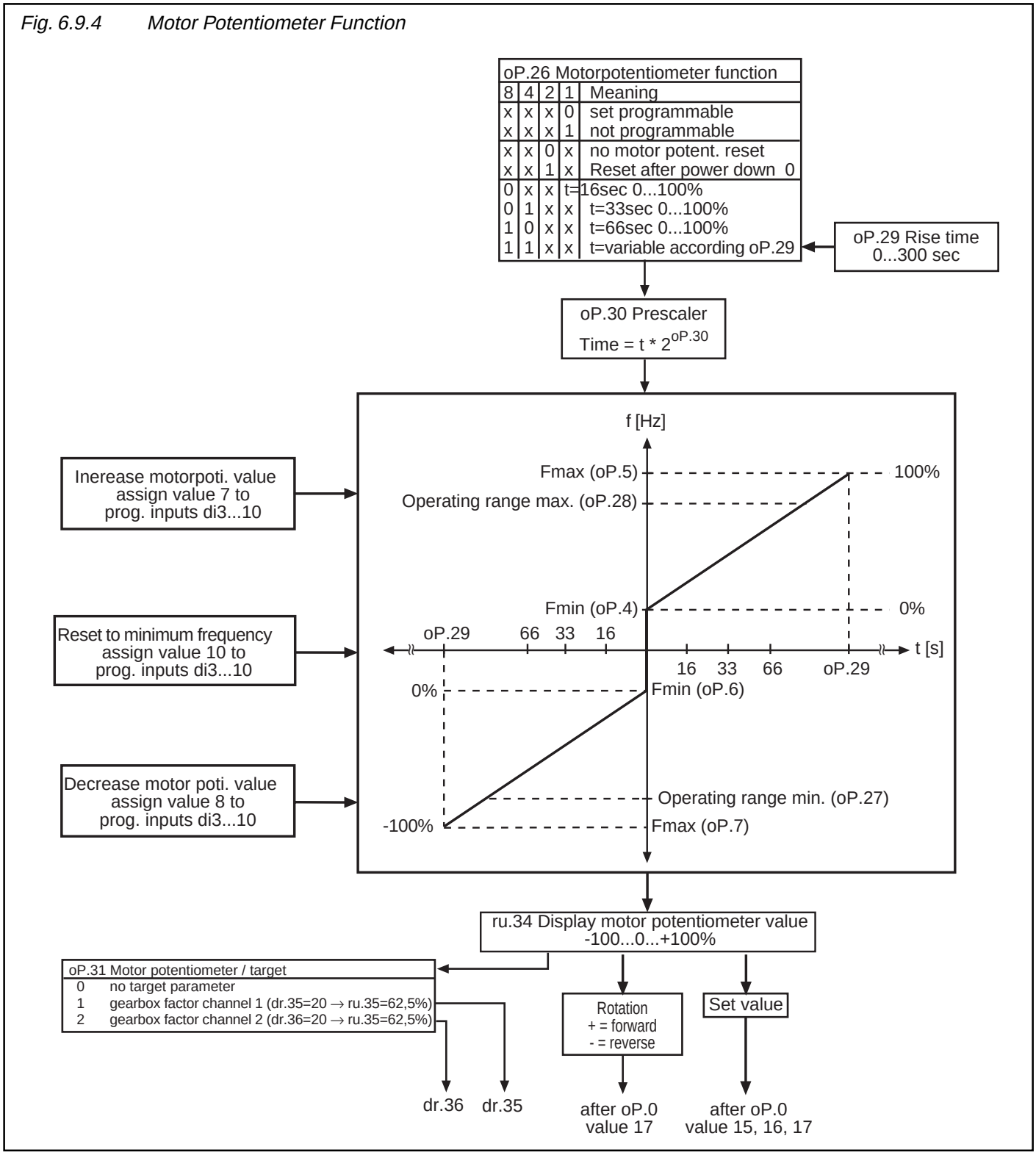

© KEB Antriebstechnik, 1997 All Rights reserved

Define Inputs

At first 2 inputs must be defined with which the motor potentiometer can be increased or decreased. For that two of the parameters di.3...di.10, depending on the selected inputs, are assigned with the value 7 and 8.

Increase motor pot. value ⇓ Value 7	Decrease motor pot. value ⇓ Value 8

If necessary, a further input can be used to reset the motor potentiometer to the adjusted minimum frequency (forward). Value 10 is assigned to this input.
In case both inputs increase/decrease potentiometer value are set at the same time, the potentiometer value is decreased.

Motor Potentiometer/Function (oP.26)

With oP.26 some basic operating methods of the motor potentiometer are defined. The parameter is bit-oriented.

Value				Significance
8	4	2	1	
x	x	x	0	motor potentiometer can be differently programmed in all parameter sets
x	x	x	1	motor potentiometer is not set programmable
x	x	0	x	after a Power-On reset the last potentiometer value is adjusted
x	x	1	x	after a Power-On reset the potentiometer value is set to 0%
0	0	x	x	rise time of 0...100% of motor potentiometer 16 s
0	1	x	x	rise time of 0...100% of motor potentiometer 33 s
1	0	x	x	rise time of 0...100% of motor potentiometer 66 s
1	1	x	x	rise time of 0...100% depending on parameter oP.29
1	0	0	0	= 8 (Default value)

Motor Potentiometer/ Rise Time (oP.29)

With this parameter the time is defined that is required by the motor potentiometer to drive from 0...100%. The adjusted time becomes effective when the value ≥ 12 is adjusted in parameter oP.26. The time is adjustable between 0...300s.

Prescaler (oP.30)

If the motor potentiometer function is not used for setpoint value setting but instead e.g. for gearbox factor adjustment, it is possible that the adjusted time is too short. By means of oP.30 the time can be extended according to following table.

oP.30	0	1	2	3	4	5	6	7	8
Multiplier	1	2	4	8	16	32	64	128	256

Actual time = adjusted time x multiplier

Operating Range (oP.27, oP.28)

The absolute set value limits of the motor potentiometer (-100%...0...+100%) are defined by the minimum/maximum frequencies (oP.4 and 5 or oP.6 and 7). The operating range can be limited further by parameters oP.27 and oP.28 (see Fig. 6.9.13). If the direction of rotation shall alos be set by the motor potentiometer (oP.0 = 17) the parameter oP.27 (operating range min.) is to be adjusted to a negative value.

Indication of Motor Potentometer Value (ru.34)

This parameter shows the actual percentage of the motor potentiometer. With the keys Up and Down the value can be changed. However, at that the adjusted times are not taken into account.

© KEB Antriebstechnik, 1997
All Rights reserved

Setpoint Value and Direction of Rotation (oP.0)

In order to adjust the setpoint value via the motor potentiometer oP.0 (set value source) must be adjusted accordingly.

Rotation	oP.0	Set Value
Keyboard/Bus	15	Motor potent.
Terminal strip	16	Motor potent.
±Motor potent.	17	Motor potent.

Motor Potentiometer/Target (oP.31)

Apart from the setpoint value setting the motor potentiometer can be assigned to further functions. For that the actual percentage (ru.34) is represented on a defined parameter, the target parameter, and can change it. Possible target parameters are:

oP.31	Motor potentiometer / Target
0	no target parameter
1	dr.35 gearbox factor channel 1 (62,5%)
2	dr.36 gearbox factor channel 2 (62,5%)

(max. parameter value at ...% attained)

To prevent any dead travel in the motor potentiometer the maximum operating range (oP.28) should be adjusted to the corresponding percentage.

Used Parameters

Param.	Adr.	R/W	PROG.	ENTER	min	max	Step	default	
ru.34	2022h	-	✔	-	100,00	100,00	0,01	0	-
oP.0	2100h	✔	✔	✔	0	26	1	1	Value 15, 16 o. 17
oP.26	211Ah	-	-	-	0	15	1	8	-
oP.27	211Bh	-	-	-	-100,00	100,00	0,01	0,00	-
oP.28	211Ch	-	-	-	-100,00	100,00	0,01	0,00	-
oP.29	211Dh	-	-	-	0	300,00 s	0,01s	131,00s	-
oP.30	211Eh	✔	-	✔	0	8	1	0	-
oP.31	211Fh	✔	-	✔	0	2	1	0	-
di.3 : di.10	2903h : 290Ah	✔	-	✔	0	16	1	0	Adjust value 7, 8 o. 10

© KEB Antriebstechnik, 1997
All Rights reserved

6.9.5 Timer Programming

Two timers are integrated in the inverter. One timer counts from an adjusted value downwards. The other timer counts upwards up to an adjusted value. The function of it can be influenced by set and reset conditions. On attaining an adjusted comparison value one condition for the setting of digital outputs is met, which for example can be used for the set changeover.

Fig. 6.9.5 Timer Programming

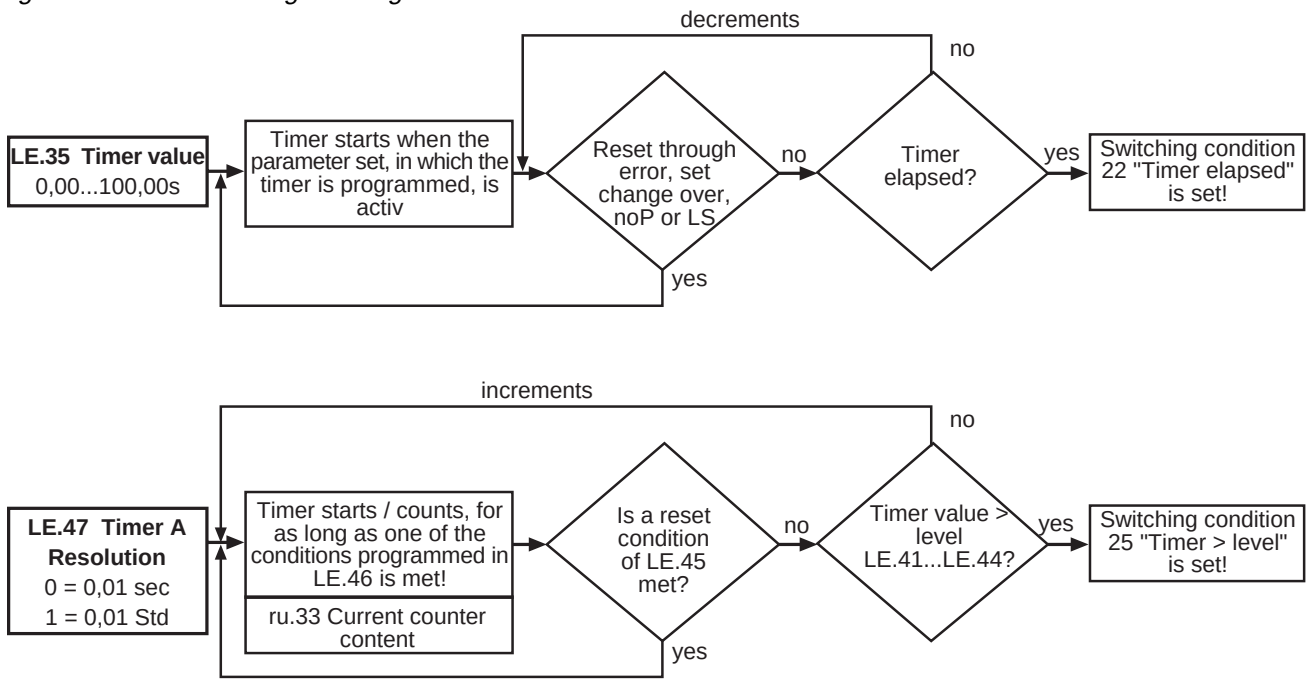

Timer/Value (LE.35)

LE.35 defines the running time of the timer in steps of 0.01s (0s = off). The timer starts when a parameter set is activated in which the timer is adjusted to > 0 s. Through an error or a set change at Low Speed (LS) or when the control release is deactivated (noP), the function is reset. When the running time of the timer has elapsed the switching condition 22 „Timer elapsed“ is set (see „Digital Outputs“).

Counter/Resolution (LE.47)

LE.47 adjusts the resolution of the counter (s / hour). The timer starts and increases the value for as long as one of the programeed conditions in LE.46 is met.

Counter/Counting Condition (LE.46)

The conditions, at which the counter increments, may be selected from the following table. The conditions are OR-linked, i.e. if one of the adjusted conditions is met the counter increments.

Bit	Value	Counting Condition
0	1	Input ST (X1.19)
1	2	Input RST (X1.20)
2	4	Input F (X1.10)
3	8	Input R (X1.11)
4	16	Input I1 (X1.4)
5	32	Input I2 (X1.5)
6	64	Input I3 (X1.6)
7	128	Input I4 (X1.7)
8	256	Modulation active
9	512	Modulation inactive
10	1024	Actual frequency = set frequency

© KEB Antriebstechnik, 1997
All Rights reserved

Current Counter Content (ru.33)

In ru.33 the current counter content is indicated in seconds or hours (depending on LE.47). By writing on ru.33 the counter can be set to 0. If the resolution in LE.47 is changed during the running time, the counter content is kept, but it is now interpreted according to the new resolution.

Counter/Reset Condition (LE.45)

The conditions, at which the counter is reset, may be selected from the following table. The conditions are OR-linked, i.e. if one of the adjusted conditions is met the counter (see ru.33) is reset. If LE.45 and LE.46 are active at the same time the counter remains on 0s.

Bit	Value	Counting Condition
0	1	Input ST (X1.19)
1	2	Input RST (X1.20)
2	4	Input F (X1.10)
3	8	Input R (X1.11)
4	16	Input I1 (X1.4)
5	32	Input I2 (X1.5)
6	64	Input I3 (X1.6)
7	128	Input I4 (X1.7)
8	256	Modulation active
9	512	Modulation inactive
10	1024	Actual frequency = Set frequency
11	2048	Active set changes
12	4096	Power On Reset

Counter/Level 1...4 (LE.41...LE.44)

LE.41...LE.44 defines the level for the switching condition 25 („Timer > Level“). If the counter exceeds an adjusted level, the switching condition is set.

Used Parameters

Param.	Adr.	R/W	PROG.	ENTER	min	max	Step	default	
ru.33	2021h	-	-	-	0	327,67	0,01	0	s / h depending on LE.47
LE.35	2B23h	✔	✔	-	0,00	100 s	0,01s	0,00	0=off
LE.41	2B29h	✔	✔	-	0,00	300,00	0,01	0	s / h depending on LE.47
LE.42	2B2Ah	✔	✔	-	0,00	300,00	0,01	0	s / h depending on LE.47
LE.43	2B2Bh	✔	✔	-	0,00	300,00	0,01	0	s / h depending on LE.47
LE.44	2B2Ch	✔	✔	-	0,00	300,00	0,01	0	s / h depending on LE.47
LE.45	2B2Dh	✔	-	-	0	4096	1	0	-
LE.46	2B2Eh	✔	-	-	0	1024	1	0	-
LE.47	2B2Fh	✔	-	-	0	1	1	0	0 = s / 1 = h

© KEB Antriebstechnik, 1997 All Rights reserved

6.9.6 Braking Control

For applications in the range of lifting and lowering the control of the holding brake can be taken over with this function. As tripping signal a digital output can be programmed. The function is set programmable.

Mode of Functioning

As shown in the opposite graphic a torque equal to the power difference F1-F2 must be built up, so that F1 does not drop after releasing the brake. We refer to it as holding torque. Thus a speed in the direction of the holding torque must be preset for slip-affected three-phase asynchronous machines.

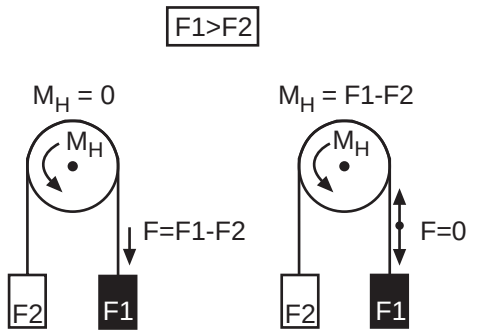

6.9.6.b Principle of Braking control

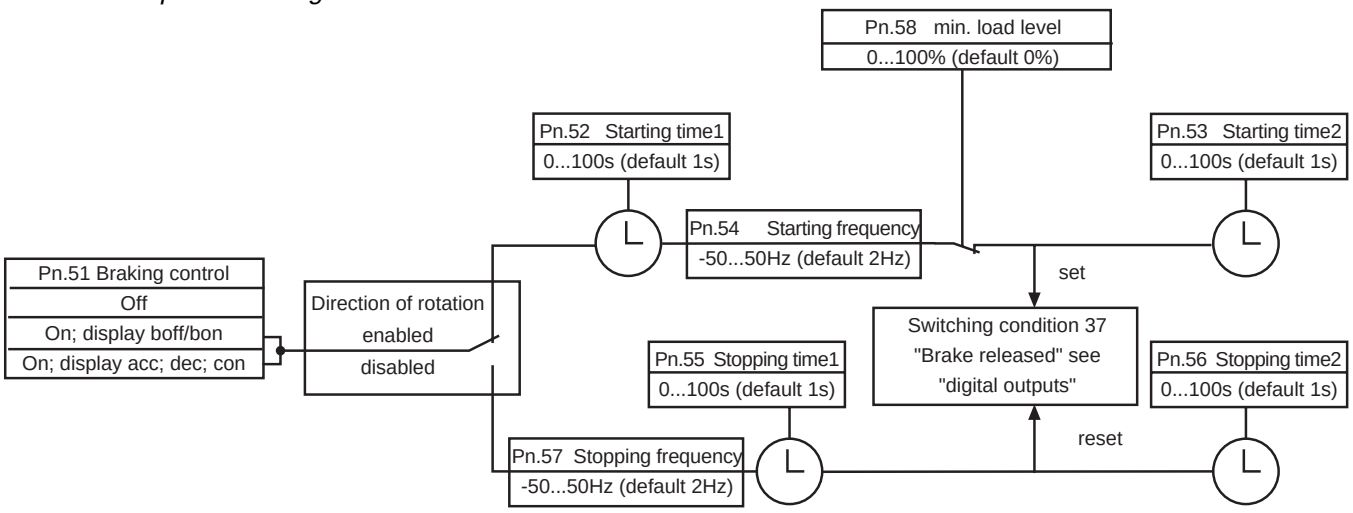

Activating Brake

At starting, triggered by activating the direction of rotation, a holding torque is built up. For an adjustable time (Pn.52: starting time 1) the holding frequency (Pn.54: starting frequency) is selected. As a precaution the monitoring of the load transfer by the inverter can now be adjusted. Before releasing the brake the load is compared with the minimum load level (Pn.58). If the load is smaller than this level error E. br is triggered and the brake remains engaged. When the load transfer is ensured the signal for releasing the brake is given after the expiration of the time and for a further time (Pn.53: starting time 2), during which the brake is mechanically released, the holding frequency is maintained. Subsequently it is accelerated to the adjusted setpoint value.

Disconnecting Brake

At stopping, triggered by taking away the direction of rotation, the inverter drives to the holding frequency (Pn.57: stopping frequency). After an adjustable time (Pn.54: stopping time 1) the signal for applying the brake is given. After the expiration of another time (Pn.55: stopping time 2), in which the brake takes over the load, it is decelerated to standstill and the inverter changes to status LS.

© KEB Antriebstechnik, 1997
All Rights reserved

6.9.6.c Example: Desired direction of rotation forward: negative holding frequency

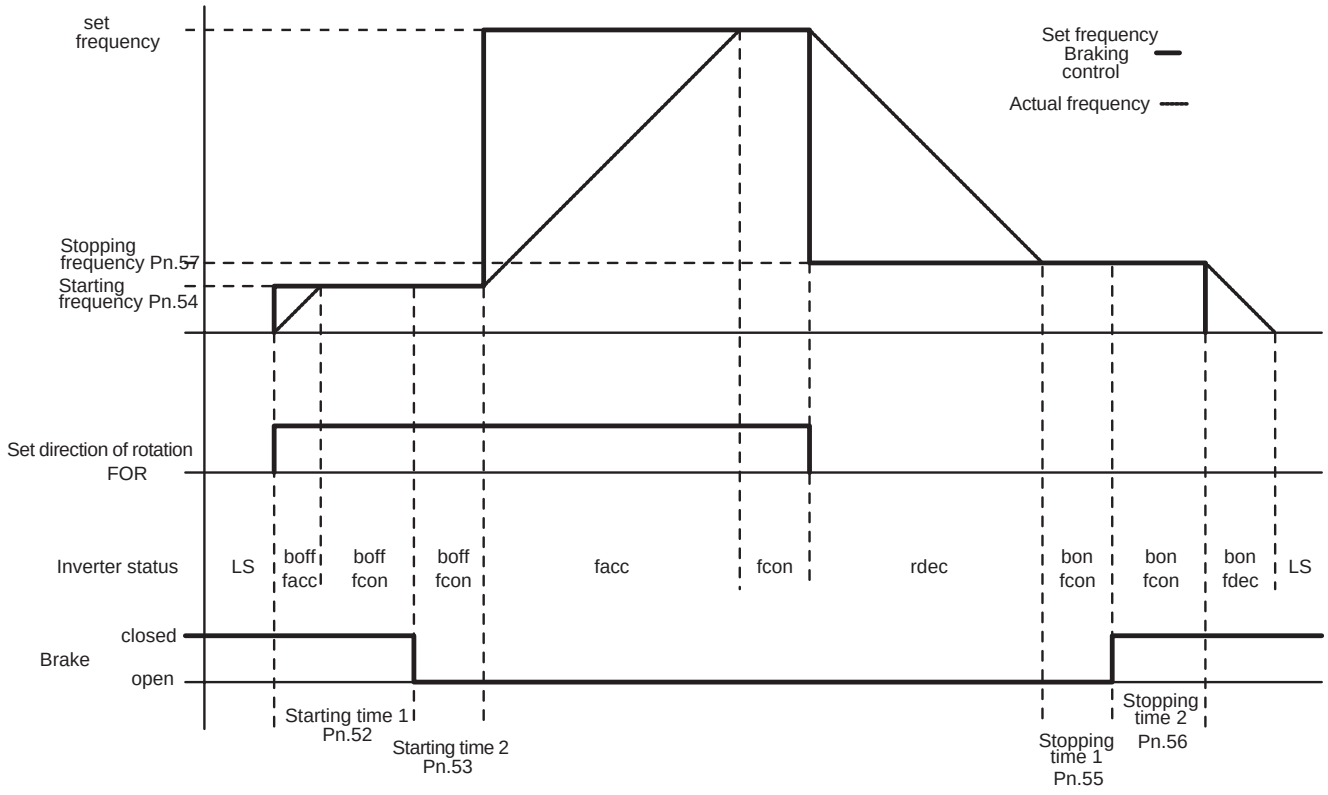

Pn.51 Mode Braking Control

With this parameter the function is activated/deactivated. In addition to it the status display can be changed over. Pn.51 is set programmable.

Value	Function
0	Function deactivated (default)
1	Braking control active, indication boff/bon
2	Braking control active, indication acc/dec/con

The status display during the holding phases depends on the adjustment of the mode for the braking control (see Fic. 6.9.6.c).

At - Pn.51 = 1 indication of the status boff (brake released) or bon (brake activated)
- Pn.51 = 2 indication of the nornal ramp status

Additionally a digital output for the control is to be programmed (refer to Chapter 6.3).

Pn.58 Minimal Load Level Error Message E. br

For the monitoring of the load transfer to the inverter a minimum load level can be adjusted in this parameter. In case the brake shall be released a the start the load must not be smaller than the adjusted level. Otherwise the error E. br is triggered. The monitoring is deactivated when Pn.58 is adjusted to 0.

All Rights reserved

Starting Frequency (Pn.54)
Stopping Frequency (Pn.57)

The adjustable starting and stopping frequencys stands in direct connection with the required holding torque. The presetting according to following formula applies to the rated motor torque:

$$\text{Start-/Stop frequency} = \frac{\text{(no-load motor speed-rated motor speed) x rated motor frequency}}{\text{rated motor speed}}$$

$$\text{Example:} \quad \frac{(1500\ \text{rpm} - 1420\ \text{rpm}) \times 50\text{Hz}}{1420\ \text{rpm}} = 2{,}67\ \text{Hz}$$

The direction in which the holding shall be effective is defined by the sign of the frequencies. The parameters are set programmable.

Release of Direction of Rotation

In case of analog setpoint value setting and set value-dependent setting of direction of rotation (oP.0 = 2) no Low Speed (LS) condition is available. Therefore following measures must be taken in order for the braking control to work:
- adjust di.20 to „2“ (release of direction of rotation)
- the release signal is given by adjusting any chosen direction of rotation at the terminal strip

or
- digital with any chosen direction of rotation (oP.3 = „1“ oder „2“)

The direction of rotation is only released. The adjustment is still done by way of the setpoint value.

6

Used Parameters

Param.	Adr.	R/W	PROG.	ENTER	min	max	Step	default	
Pn.51	2233h	✔	✔	-	0	2	1	0	-
Pn.52	2234h	✔	✔	-	0,00	100,00 s	0,01 s	1,00 s	-
Pn.53	2235h	✔	✔	-	0,00	100,00 s	0,01 s	1,00 s	-
Pn.54	2236h	✔	✔	-	-50,00 Hz	50,00 Hz	0,0125 Hz	2 Hz	-
Pn.55	2237h	✔	✔	-	0,00	100,00 s	0,01 s	1,00 s	-
Pn.56	2238h	✔	✔	-	0,00	100,00 s	0,01 s	1,00 s	-
Pn.57	2239h	✔	✔	-	-50,00 Hz	50,00 Hz	0,0125 Hz	2 Hz	-
Pn.58	223Ah	✔	✔	-	0	100 %	1 %	0 %	-

All Rights reserved

6.9.7 Unit Conversion

The KEB COMBIVERT makes available a parameter which allows the user to represent individual units (e.g. bottles/min or litre/hour).
The source is selected with parameter ud.87. The parameters ud.88...ud.91 are for the dimensioning of the conversion. The output is done in parameter ru.43.

6.9.7 Principle of Unit Conversion

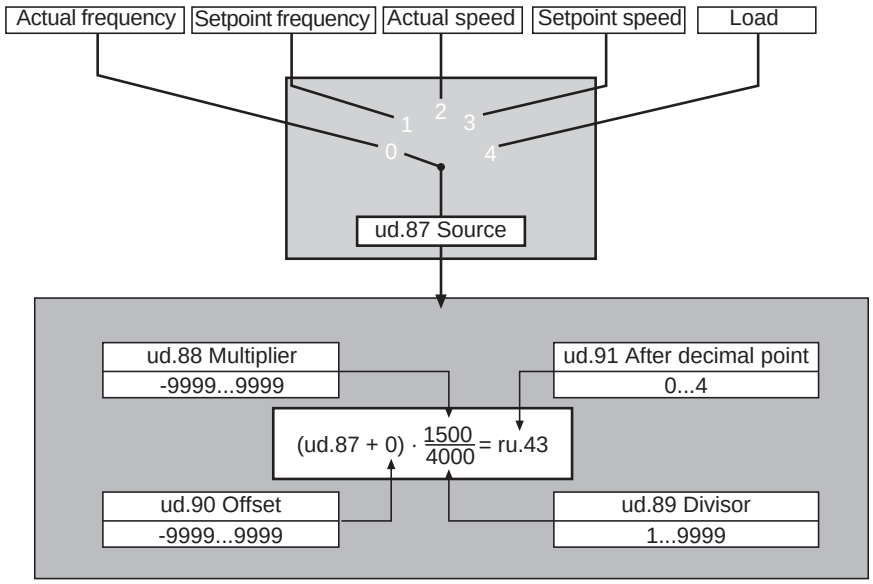

Definition of own Standardization

In the following part you can define your own standardization. Enter into the following diagram

- a point **A** at the frequency at where display shall just indicate „0“ (in the example 10 Hz)
- a point **B** at the frequency where a desired value with the selected unit is reached (in the example 50 Hz).

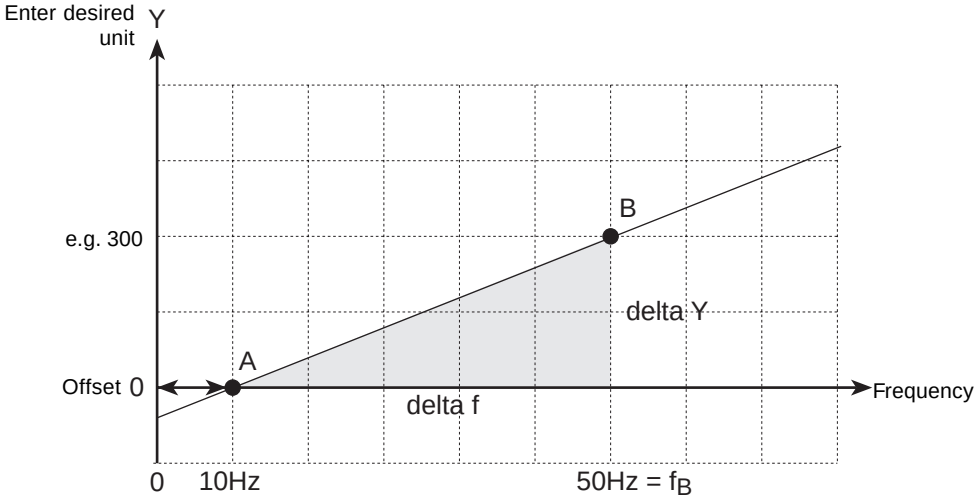

Define - delta f (in the example 50 Hz - 10 Hz = 40 Hz) and
- delta Y (in the example 300 - 0 = 300).

Calculation of ud.88 / ud.89

ud.88 = delta Y = 300

$$ud.89 = \frac{\text{delta f}}{\text{Resolution}} = \frac{40\ \text{Hz}}{0{,}0125\ \text{Hz}} = 3200$$

$$\text{Desired unit} = \frac{ud.88}{ud.89} = \frac{\text{delta Y}}{\text{nonstandardized value}} = \frac{300}{3200}\ \text{(if necessary shorten)}$$

Adjust Offset ud.90

$$\text{Offset } ud.90 = \frac{f_B - \text{delta f}}{0{,}0125\ \text{Hz}} = \frac{50\ \text{Hz} - 40\ \text{Hz}}{0{,}0125\ \text{Hz}} = 800$$

Resolutions

Following values are to be entered as resolution:

<u>at ud.87 = 0 and 1</u>
frequency mode ud.11 = 0 (409,5875 Hz) ⇒ resolution = 0,0125 Hz
= 1 (819,17 Hz) ⇒ resolution = 0,025 Hz
= 2 (1638,35 Hz) ⇒ resolution = 0,05 Hz

<u>at ud.87 = 2 und 3</u>
resolution = 0,5 U/min

<u>at ud.87 = 4</u>
resolution = 1 %

Used Parameters

Param.	Adr.	R/W	PROG.	ENTER	min	max	Step	default	
ru.43	202Bh	-	-	-	-32767	32767	1	-	-
ud.87	2657h	✔	-	-	0	4	1	0	-
ud.88	2658h	✔	-	-	-9999	9999	1	1500	-
ud.89	2659h	✔	-	-	1	9999	1	4000	-
ud.90	265Ah	✔	-	-	-9999	9999	1	0	-
ud.91	265Bh	✔	-	-	0	4	1	0	-

© KEB Antriebstechnik, 1997
All Rights reserved

1. Introduction

2. Summary

3. Hardware

4. Operation

5. Parameter

6. Functions

7. Start-up

8. Special Operation

9. Error Assistance

10. Project Planning

11. Networks

12. Applications

13. Annex

6.1 Operating and Appliance Displays

6.2 Analog In- and Outputs

6.3 Digital In- and Outputs

6.4 Set Value and Ramp Adjustment

6.5 Voltage/Frequency (U/f) Characteristics

6.6 Motor Presetting

6.7 Keep on Running Functions

6.8 Parameter Sets

6.9 Special Functions

6.10 Encoder Interface

6.11 PI-Controller

6.12 CP-Parameter definition

6.10.1 Encoder summary 3
6.10.2 Encoder interface with 2nd encoder 4
6.10.3 Encoder interface with tacho generator evaluation 6
6.10.4 Encoderinterface with ±10V input 6
6.10.5 Encoder interface with initiator input 6
6.10.6 Speed measurement 7
6.10.7 Evaluation of incremental encoders 8
6.10.8 Evaluation of tacho generators 9
6.10.9 Evaluation of initiators 10
6.10.10 Gearbox factors 10
6.10.11 Error message E.co1/E.co2 . 10
6.10.12 Definition of actual value channel (cn.3) 10
6.10.13 Frequent errors 11
6.10.14 Used parameters 11

6.10 Encoder Interface

Two independent channels for the speed measurement are supported, which can be used both as actual speed detection for speed control and as setpoint value source. Thus allowing the realization of speed synchronous drives. Position detection, positioning and angular synchronous operation are not supported.
Channel 1 supports a standard incremental encoder interface. Channel 2 can process in different versions incremental encoders, tacho generators, initiators or +/-10 V signals.

Units with integrated encoder interface are registered according to the following code:

Customer-specific units may deviate from this code!

XX.F4.CXX-XLXX

- Version number (starts with 0)
- Interface type (see table Interface Types)
- L (code letter for integrated encoder interface)
- 4 (Special unit 400V)
- 5 (Special unit 230V)

Interface Type	Channel 1	Channel 2	Separate Supply *)
0	encoder interface	Tacho input	yes
1	encoder interface	encoder interface	yes
2	encoder interface	+/- 10V input	yes
3	encoder interface	Initiator	yes

*) Separate supply means, that control inclusive encoder interface are supplied with energy from an external voltage source. Thus status and error messages are stored even when disconnecting the power circuit.

6.10.1 Encoder Summary

Fig. 6.10.1 Encoder summary

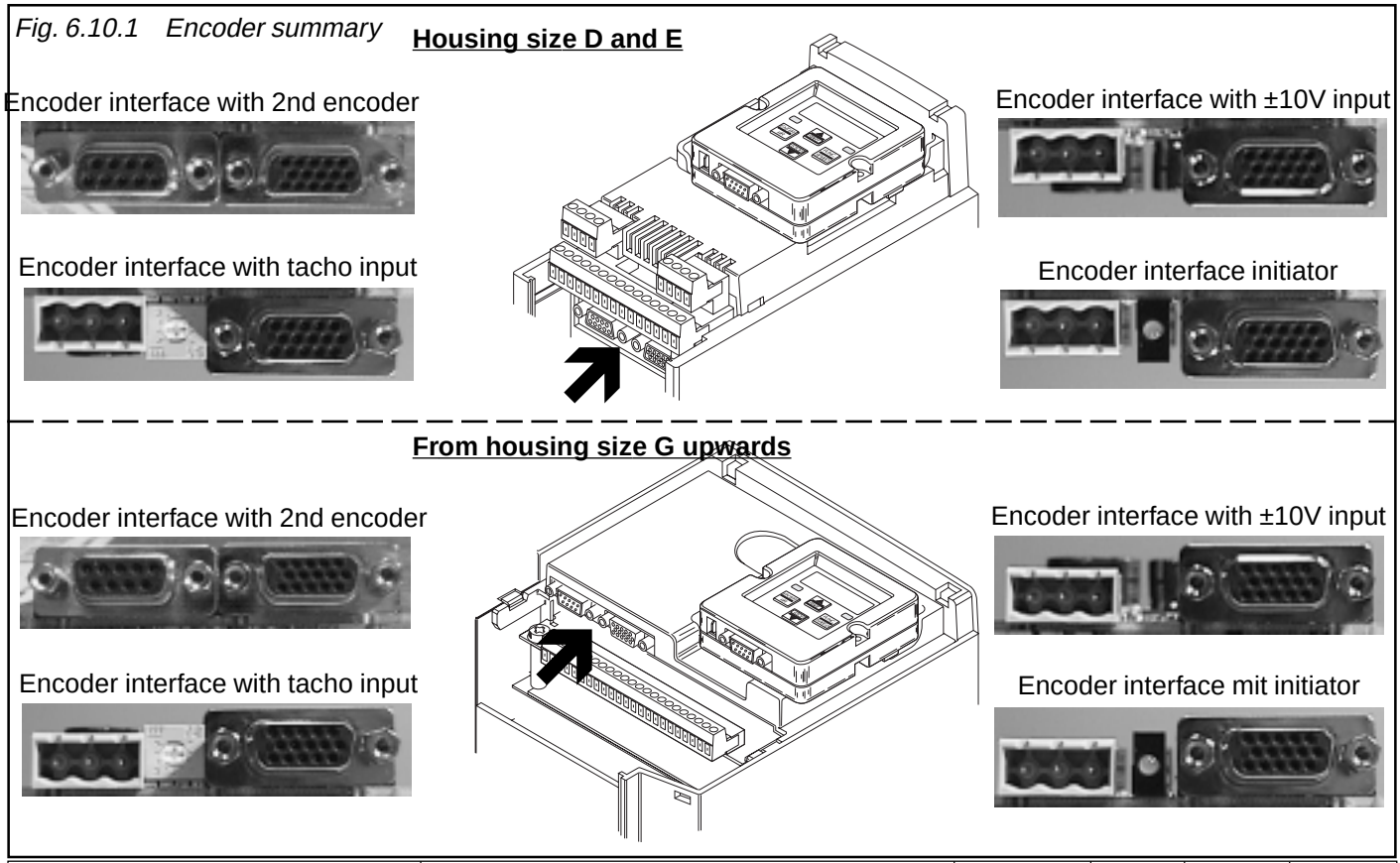

6.10.2 Encoder Interface with 2nd Encoder

Fig. 6.10.2.a Incremental encoder inputs

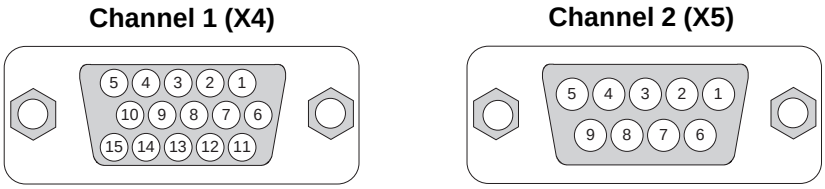

Pin Description and Specification

Signal	X4	X5	Description	Specification	
Uext	11	5	ext. supply	see below	
+5 V	12	4	Supply 5V encoder	5 V	max. 100mA **(*1)**
0 V	13	9	Reference potential		
A+	8	1	Signal input A+	2 .. 5 V	Terminating resistor
A-	3	6	Signal input A-	2 .. 5 V	Rt = 150 Ohm
B+	9	2	Signal input B+	2 .. 5 V	Terminating resistor
B-	4	7	Signal input B-	2 .. 5 V	Rt = 150 Ohm
Shield	Housing	Housing	PE		

*1 The supply voltage for 5V encoder is generated from Uext. At that the load on Uext amounts to approx. 1/3 of the encoder current.

The Terminal Uext

Uext is a voltage needed for the supply of the control. The terminal Uext at the incremental encoder sockets is directly connected with terminal X1.14 (Uext) of the ocntrol. After deducting the current required by the control, following currents/voltages are available at terminal Uext for the supply of the incremental encoders

Housing D	21,5V ±3V	100mA
Housing E	25,5V ±3V	100mA
from housing G	18V ±1V	200mA

If larger currents are needed for the supply of the incremental encoders, an external voltage supply must be used. The external voltage is fed into terminal X1.14 and must be 24V **±25%**. On disconnecting the power circuit the control is still supplied with energy.

Input Wiring

Fig. 6.10.2.b Input wiring of encoder inputs

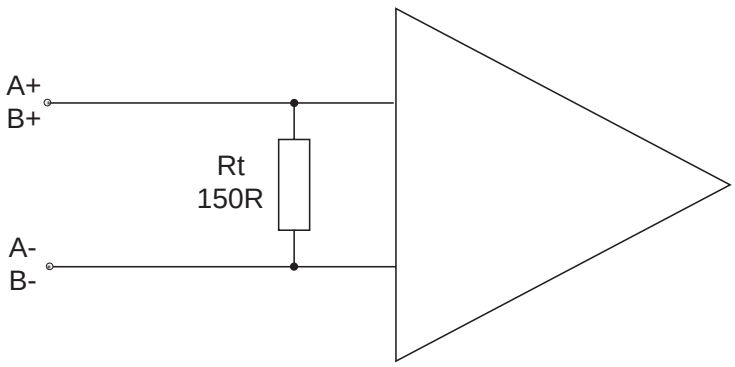

Cut-off Frequency

The cut-off frequency of the incremental encoder interface is 200 kHz. To ensure a safe operation of the speed measurement following conditions must be met.

> The maximum frequency of the incremental encoder signal must be smaller than the cut-off frequency of the incremental encoder as well as of the incremental encoder interface!

The maximum frequency of the incremental encoder signal is calculated according to following formula:

$$f_{Enc_max}[kHz] = \frac{\text{Encoder increments} \bullet \text{speed}_{max}[1/\text{min}]}{60000}$$

Encoder and Cable

KEB can supply a suitable encoder for the incremental encoder interface. This encoder is also used on KEB standard motors. Furthermore, prefabricated encoder cables for the connection to channel 1 (15-poles D-Sub) as well as to channel 2 (9-poles D-Sub) are available.

Incremental encoder: 00.EK.QI1-0503
RS422; voltage supply 5V (±5%)
A, B and 0 - track; 2500 Inc / revolutions; max. 200kHz

Encoder cable: Channel 1: 00.F4.109 - 000X (X = length in m; standard 5m)
Channel 2: 00.F4.209 - 000X (X = length in m; standard 5m)

Signal Description

As input signals at A+/A- or B+/B- TTL-differential voltage levels according to TIA/EIA-RS422-B are expected.

Fig. 6.10.2.d Input signals of channel 1 and 2

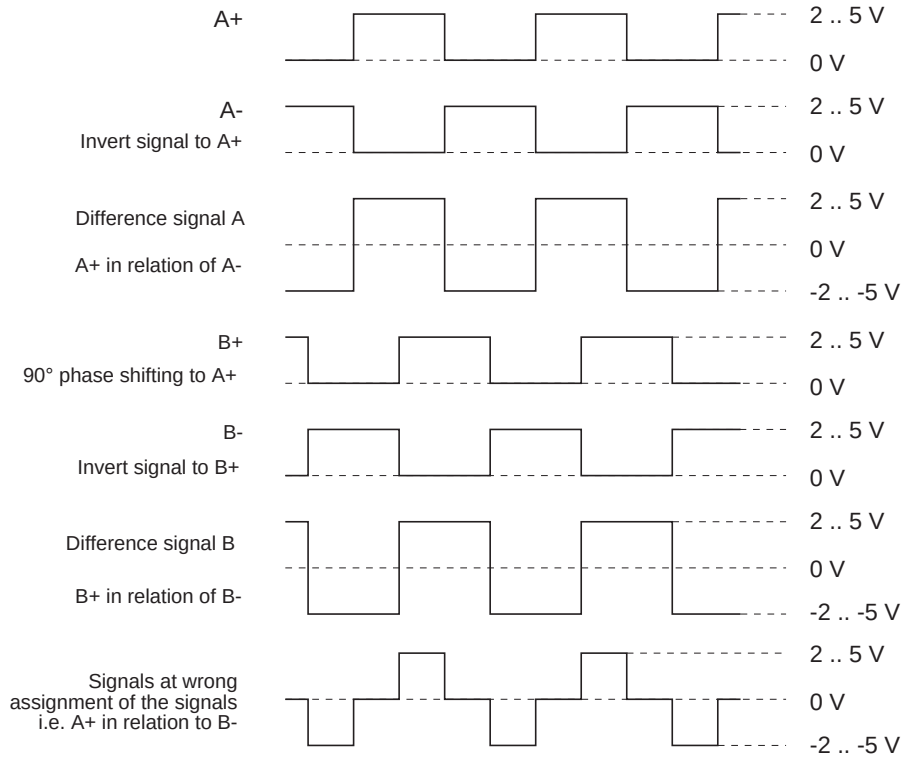

© KEB Antriebstechnik, 1997
All Rights reserved

6.10.3 Encoder Interface with Tacho Generator evaluation

The incremental encoder Interface of the following option is identical with channel 1 of 6.10.2.

Fig. 6.10.3.a Incremental encoder interface with tacho generator evaluation

Housing size D and E **From housing size G upwards**

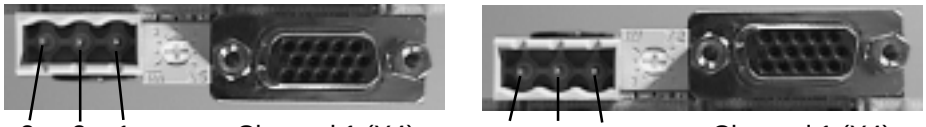

3 2 1 Channel 1 (X4) 1 2 3 Channel 1 (X4)

Fig. 6.10.3.b Block diagram of tacho evaluation

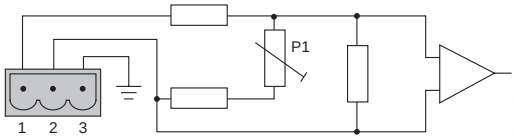

R_i: 50...55kΩ (depends on P1)
U_{Tacho}: max. ±100V

Terminal 1: Tacho +
Terminal 2: Tacho -
Terminal 3: PE

6.10.4 Encoder Interface with ±10V Input

The incremental encoder Interface of the following option is identical with channel 1 of 6.10.2.

Fig. 6.10.4.a Incremental encoder interface with ±10V input

Housing size D and E **From housing size G upwards**

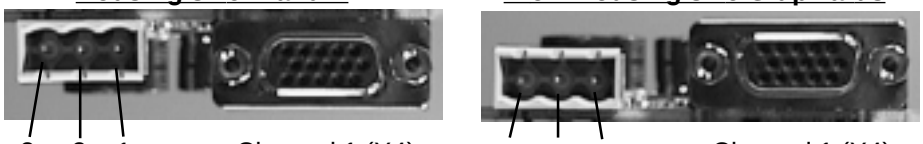

3 2 1 Channel 1 (X4) 1 2 3 Channel 1 (X4)

Fig. 6.10.4.b Block diagram of ±10V input

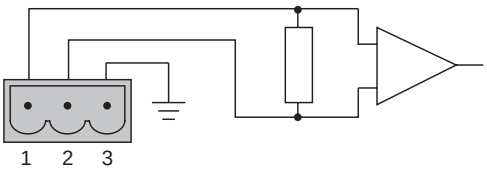

R_i: 60kΩ
U_{Tacho}: max. ±10V

Terminal 1: Analog option +
Terminal 2: Analog option -
Terminal 3: PE

6.10.5 Encoder Interface with Initiator Input

The incremental encoder Interface of the following option is identical with channel 1 of 6.10.2.

Fig. 6.10.4.a Incremental encoder interface with initiator input

Housing size D and E **From housing size G upwards**

3 2 1 Channel 1 (X4) 1 2 3 Channel 1 (X4)

© KEB Antriebstechnik, 1997
All Rights reserved

Fig. 6.10.5.b Block diagram of initiator input

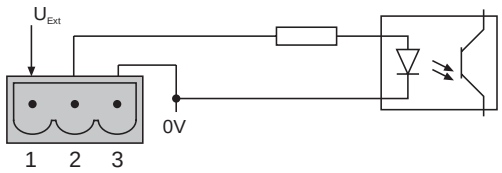

R_i: 1.9 kΩ
U_{in} (max.): U_{ext}
T_{Puls}(min.): 25 µs
Terminal 1: U_{ext}
Terminal 2: Initiator signal
Terminal 3: 0V

6.10.6 Speed Measurement

In the following the range from the input terminals of the interface card up to the as setpoint value or actual value analyzable speeds and frequencies is referred to as speed measurement. Fig. 1 shows the signal flow and the intervention possibilities of the speed measurement.

Fig. 6.10.6.a Summary of speed measurement

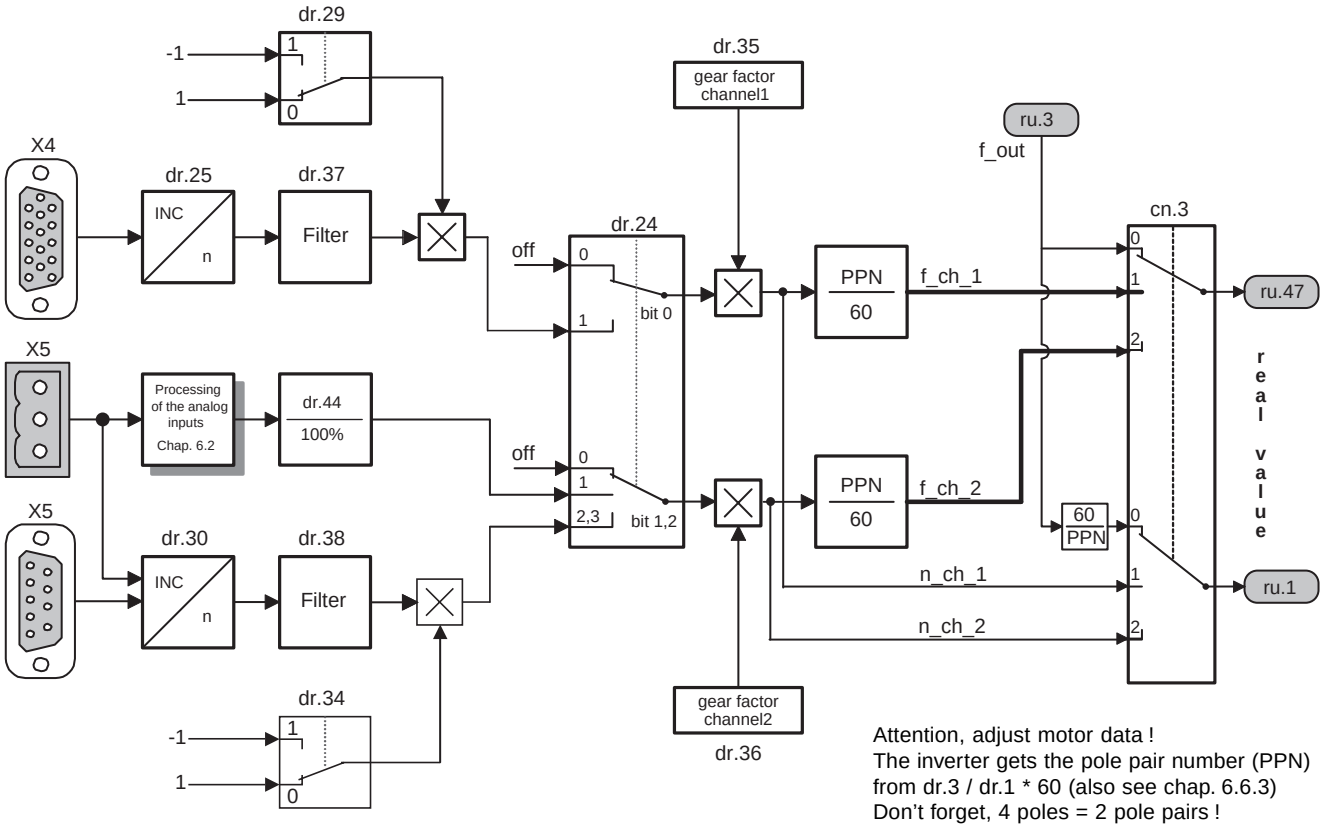

Defintion of the Hardware

Central parameter of the speed measurement is dr.24. This parameter must be adjusted according to the installed interface card.

Value	bit 0	bit 1,2	Channel 1	Channel 2
0	0	0	no detection	no detection
1	1	0	Incremental encoder input 1	no detection
2	0	1	no detection	Tacho input (±10V input)
3	1	1	Incremental encoder input 1	Tacho input (±10V input)
4	0	2	no detection	Incremental encoder input 2
5	1	2	Incremental encoder input 1	Incremental encoder input2
6	0	3	no detection	Initiator input
7	1	3	Incremental encoder input 1	Initiator input

6.10.7 Evaluation of Incremental Encoders

The evaluation of the incremental encoders is supported by two signals set off by 90° and signal levels according to RS422-standard (refer to 'Technical Data'). Basically the incremental encoder evaluation consists of a counter which is increased or decreased under following conditions.

Changing counter content:	Signal A	Signal B
Increase of counter	Pos. edge State High Neg. edge State Low	State Low Pos. edge State High Neg. edge
Decrease of counter	Pos. edge State Low Neg. edge State High	State High Pos. edge State Low Neg. edge

Fig. 6.10.7.a Evaluation of incremental encoder signals

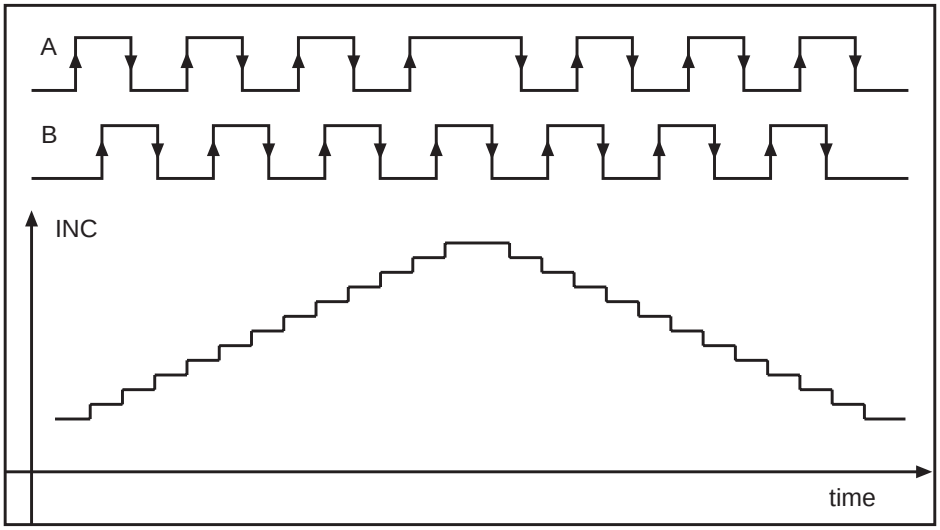

The speed and the direction of rotation can now be calculated from the counter change per time:

$$n = \frac{\text{counter difference}}{4 \bullet \text{encoder increments} \bullet \text{time gate}}$$

The encoder line number is adjusted via dr.25 (channel 1) or dr.30 (channel 2). The time gate can be adjusted via dr.37 (channel 1) or dr.38 (channel 2) according to following formula:

$$\text{time gate} = 4\text{ms} \bullet 2^{\text{dr.37}}$$

Thus the resolution of the incremental encoder evaluation depends on the line number of the used encoder and the size of the time gate for the differentiation of the counter content.

$$\Delta n = \frac{1}{4 \bullet \text{encoder increments} \bullet \text{time gate}}$$

© KEB Antriebstechnik, 1997
All Rights reserved

Under consideration of the resolution of parameter dr.37 or dr.38 it results in following formula for Delta n in 1/min:

$$\Delta n[1/\min] = \frac{3750}{dr.25 * 2^{dr.37}}$$

This shows, when using encoders with low no. of increments only a rough speed resolution can be attained or the time gate must be chosen very large which results in a slower detection.
By way of parameter dr.29 (channel 1) or dr.34 (channel 2) the direction of rotation of the speed measurement may be reversed.

6.10.8 Evaluation of Tacho Generators

Tacho generators supply an analog signal which is proportional to the speed of the tacho generators. The direction of rotation is gained from the sign of the analog signal. The analog signal of the tacho generator is converted into a +/-10V signal in the evaluating circuit. By way of a potentiometer the tacho voltage at maximum speed can be adjusted to 10 V (refer to „Adjustment of Tacho Generator“). The ±10V signal is fed to the analog option channel of the control card (see Chapter 6.2 „Analog In-/ Outputs“).
The conversion into speed is based on following formula:

$$n = \frac{dr.44}{100\%}$$

Adjsutment of tacho generator

1. Determine the maximum speed of the motor in the application (nmax_Motor)
   Determine the speed of the tacho at maximum motor speed (nmax_Tacho)
   Determine tacho voltage at nmax_Tacho (Umax_Tacho)
   In case of Umax_Tacho > 100V use another tacho or reduce maximum tacho speed!

2. Adjust analog amplifier for the optional analog input:

Indication of analog values after amplification:	**Adjust An.22 bit 7**
Amplification to 1:	**An.23 = 1**
Offset x to 0:	**An.24 = 0**
Offset y to 0:	**An.25 = 0**
Noise filter analog option	**An.26 = 1…4**
Zero clamp speed analog option	**An.27 = 0…11**

   Adjust reference speed to maximum tacho speed:
   dr.44 = nmax_Tacho
   Adjust encoder interface selection: (channel 2= Tacho):
   dr.24 = 2 oder 3
   Adjust gearbox factor for channel 2:
   dr.36 = nmax_Motor / nmax_Tacho
   Adjust source of actual speed display on channel 2:
   cn.3 = 2
   Adjust motor data (important are rated motor speed and rated motor frequency).

3. Accelerate motor in idle operation to maximum speed and operate with constant speed.
   Adjust potentiometer on the interface card up to ru.45 = 100%.
   If 100 % are not attained, even if the potentiometer is turned to the limit stop, increase An.23 up to ru.45 = 100%.
   ru.1 now indicates the actual motor speed.

© KEB Antriebstechnik, 1997
All Rights reserved

6.10.9 Evaluation of Initiators

The initiator evaluation consists mainly of a counter, which is increased at every edge of the input signal

The speed can now be calculated from the counter change per time:

$$n = \frac{\text{counter difference}}{2 \bullet \text{encoder increments} \bullet \text{time gate}}$$

The line number is adjusted via dr.30 (channel2). The time gate can be changed via dr.38 (channel 2 according to following formula:

$$\text{time gate} = 4\text{ms} \bullet 2^{\text{dr.38}}$$

Thus the resolution of the initiator evaluation depends on the line number of the used system and the size of the time gate for the differentiation of the counter content.

$$\Delta n = \frac{1}{2 \bullet \text{encoder increments} \bullet \text{time gate}}$$

Under consideration of the resolution of parameter dr.38 it results in following formula for Delta n in 1/min:

$$\Delta n[1/\min] = \frac{7500}{dr.30 * 2^{dr.38}}$$

This shows, when using initiator systems with low line numbers only a rough speed resolution can be attained or the time gate must be chosen very large which results in a slower detection.

The result of the initiator evaluation is always a positive speed (direction of rotation FOR). At dr.43 = 1 the sign of the determined speed of the initiator evaluation corresponds to the sign of the output frequency. By way of parameter dr.34 (channel 2) the direction of rotation of the speed measurement may be reversed.

6.10.10 Gearbox Factors

The speeds for channel 1 or channel 2 selected with dr.24 can be multiplied by a gearbox factor. The gearbox factors are adjusted via dr.35 (channel 1) or dr.36 (channel 2). This allows the evaluation of incremental encoders which are not directly mounted on the motor shaft.

6.10.11 Error Message E.co1/E.co2

To indicate overshooting and unpermissble limits the speed measurement generates the error message E.co1 / E.co2. This error occurs when in any section of the speed or frequency calculation a speed > 9999 min^{-1} or a frequency > 409,6 / 819,2 Hz occurs.

Inverter status E.co1 = 54
Inverter status E.co2 = 55

6.10.12 Definition of Actual Value Channel (cn.3)

With cn.3 the channel which supplies the actual frequency to the subsequent control is defined. Following adjustments are possible:

cn.3: 0 ⇒ Output frequency
1 ⇒ Channel 1
2 ⇒ Channel 2

The selected actual value is indicated in ru.47 as actual frequency and in ru.1 as actual speed!

© KEB Antriebstechnik, 1997
All Rights reserved

6.10.13 Frequent Errors

To quickly achieve positive results when using feedbacks, observe and check the following check list:

- Enter correct motor and encoder data
- Check gearbox factor if the encoder is not directly mounted on the motor
- Check encoder for firm attachment
- Use tight fitting connection between motor shaft and encoder (rubber or shrink tubing are unsuited).
- Loose stud screws on the encoder shaft cause slipping through at fast acceleration
- In case of harmonics in the system check the plant for backlash free clutches
- Since the encoder signals are in the kHz range absolutely observe cable specifications as well as maximum cable length and screens.
- Check, whether the encoder is suitable for the desired speed range (e.g. a pulse encoder with 1 pulse per rotation will not provide good control behaviour at 20 rpm). Refer to section 6.10.7 for the calculation formula. The controls are adjusted for inverter : motor 1:1 dimensioning.
- In case of two channel measurements with the oscilloscope always measure against 0V: voltage differential measurements of the encoder signal are to be carried out individually!
- When carrying out the connection ensure the correct assignment of A /A' and B/B' so that actual speed is not returned opposite to the setpoint speed.

Testing of Encoder Signals:

Actual speed of encoder channel:
- Adjust cn.3 to „1“ or „2“ (depending on encoder channel)
- Adjust dr.24 to corresponding encoder channel

Operate inverter in open-loop operation:
- Setpoint speed ru.4 and actual speed ru.1 must have the same sign. If this is ensured, it can be changed to closed-loop operation.

6.10.14 Used Parameters

Param.	Adr.	R/W	PROG.	ENTER	min	max	Step	default	
ru.1	2001h	-	-	-	-32767 U/min	32676 U/min	0,5 U/min	-	-
ru.47	202Fh	-	-	-	-409,5875 Hz	409,5875 Hz	0,0125 Hz	-	-
cn.3	2503h	✔	✔	-	0	2	1	0	-
dr.24	2418h	✔	-	-	0	7	1	0	-
dr.25	2419h	✔	-	-	1 inc/r	10000 inc/r	1 inc/r	2500 inc/r	-
dr.29	241Dh	✔	-	-	0	1	1	0	-
dr.30	241Eh	✔	-	-	1 inc/r	10000 inc/r	1 inc/r	2500 inc/r	-
dr.34	2422h	✔	-	-	0	1	1	0	-
dr.35	2423h	✔	-	-	-20,000	20,000	0,001	1,000	-
dr.36	2424h	✔	-	-	-20,000	20,000	0,001	1,000	-
dr.37	2425h	✔	-	-	0	6	1	0	-
dr.38	2426h	✔	-	-	0	6	1	0	-
dr.44	242Ch	✔	-	-	0	9999 U/min	1 U/min	-	-
cn.3	2503h	✔	-	-	0	2	1	0	-

1. Introduction

2. Summary

3. Hardware

4. Operation

5. Parameter

6. Functions

6.1 Operating and Appliance Display

6.2 Analog In- and Outputs

6.3 Digital In- and Outputs

6.4 Set Value and Ramp Adjustment

6.5 Voltage/Frequency U/f) Characteristic

6.6 Motor Presetting

6.7 Keep on Running Functions

6.8 Parameter Sets

6.9 Special Functions

6.10 Encoder Interface

6.11 PI-Controller

6.12 CP-Parameter Definition

6.11.1 The PI-Controller 3
6.11.2 Controller Selection 4
6.11.3 Autoboost and Slip Compensation 6
6.11.4 Set Value Calculation [%] 7
6.11.5 Actual Value Calculation [%] ... 9
6.11.6 Diameter Compensation 10
6.11.7 Controller Limiting 11
6.11.8 Used Parameters 12

7. Start-up

8. Special Operation

9. Error Assistance

10. Project Planning

11. Networks

12. Applications

13. Annex

6.11 PI-Controller

The KEB COMBIVERT is equipped with a universally programmable PI-Controller, with it pressure, temperature or dancing position controls can be set up. Through an optimal speed detection (see Chap. 6.10) a speed control with incremental encoder, tacho generator or pulse encoder is realizable.

6.11.1 The PI-Controller

The programmable PI-Controller is the heart of the entire regulation. This is shown in all subsequent control structures. It consists of a set/actual value comparator, that puts the system deviation on the controller. With cn.16 and cn.17 the P- or I-component is adjustable. The parameters cn.18 and cn.19 limit the maximum manipulated variable of the controller. With the PI-Controller fade-in time (cn.26) the controller inverse amplification factor is defined between 0…100%. Parameter cn.25 adjusts the frequency amplification factor in Hz/%. Through parameter cn.21 as well as the digital inputs the PI-Controller or the control fade-in can be reset.

Picture 6.11.1 PI-Controller

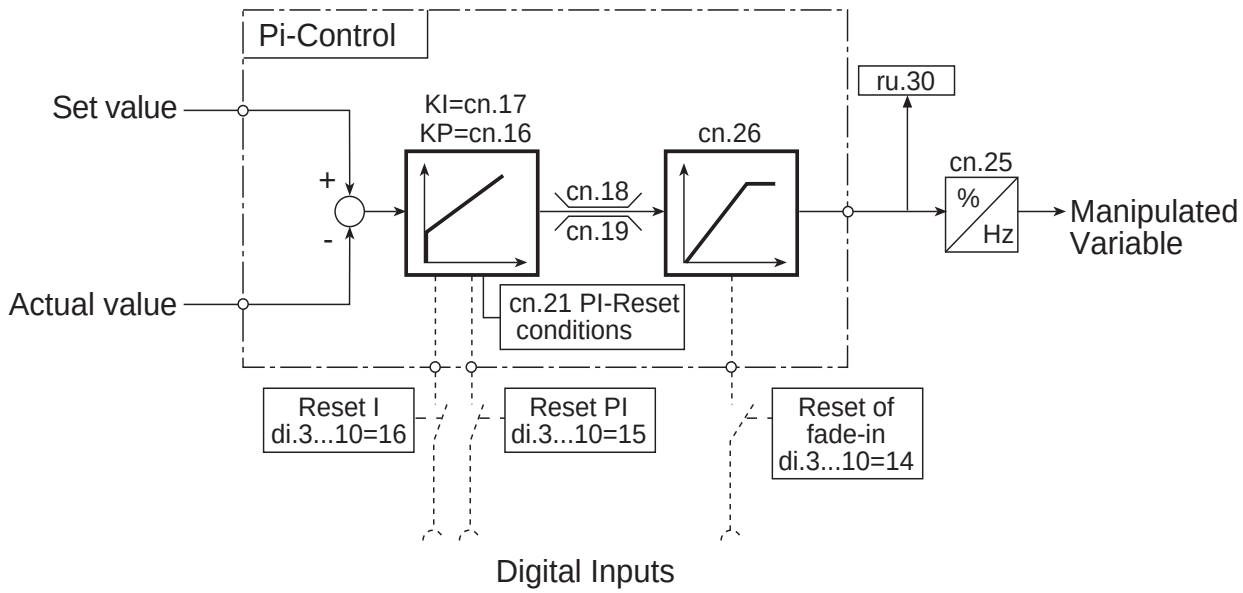

PI-Controller KP (cn.16) Defines the proportional amplification factor in the range of 0,00...250,00.

PI-Controller KI (cn.17) Defines the integral amplification factor in the range of 0,000...30,000.

Maximum correcting range (cn.18, cn.19) The max. positive manipulated variable is determined with cn.18 in the range of 0...100%, the max. negative manipulated variable is determined with cn.19 in the range of 0...-100%.

PI-reset conditions (cn.21) With cn.21 it is possible to regulate the reset conditions for the PI-Controller. Thus simple speed regulations are realizable for both directions of rotation.

cn.21	Function
0	PI-Controller is not reset
1	PI-Controller = 0 (is continously reset)
2	PI-Controller is reset in case of modulation off

For speed regulations adjust the value „2“, with that the I-component of the controller is reset at LS or nOP. The value „1“ serves mainly for start-up, to reset the controller manually.

Reset by way of digital inputs

The I-/PI-component as well as the controller fade-in can be reset manually via a digital input. For that enter the value 14, 15 or 16 in one of the parameters di.3…10.

Fade-in time (cn.26)

With it the control action during the start can be increased linear or at the reset of the fade-in decreased linear. The time refers of 100% of the controller default value. If one input is programmed for „Reset fade-in“ (di.1…di.10 value 14) the fade-in is counted down at active input and counted up at inactive input.

! At value -0,01 the fade-in is not dependent on the time but dependent on the ramp output frequency. It is calculated according ot following formula:

$$\frac{f_{set}}{f_{max}} * 100\%$$

Value range: -0,01 ... 300s Resolution: 0,01s

Frequency factor (cn.25)

This block converts the percental manipulated variable, coming from the controller, into a frequency. The adjustment of cn.25 determines the output of Hz per % .Adjustable are 0,0…3.0Hz/%.

6.11.2 Controller Selection (cn.0)

Among other things the parameter cn.0 determines the basic control structure. It is bit-coded; in case of several selections the sum of the decimal value is entered.

Bit	Dec.	Significance
0	0 1	0: Autoboost off 1: Autoboost on
1-2	0 2 4 6	0: off 1: slip compensation 2: speed control (dancer, pressure sensor) 3: speed control (encoder interface)
3	0 8	0: change of rotation direction through controller is not possible 1: change of rotation direction through controller is possible
4	0 16	0: no control action at $F_{setting}$ = 0 Hz 1: control action also at $F_{setting}$ = 0 Hz
5	0 32	0: no freezing of the I-component on reaching the limit 1: freezing of the I-component on reaching the limit
6	0 64	At speed-controlled operation the slip limiting prevents the stalling of the motor 0: slip limiting inactive 1: slip limiting active
7	0 128	0: voltage change through autoboost subject to sign 1: voltage change through autoboost always positive

Recommended values

Bit 3...4 preferably 1; at regulation around speed 0 imperative 1
Bit 5...6 preferably 1

© KEB Antriebstechnik, 1997
All Rights reserved

Determination of control

With cn.0 Bit 1 and 2 it is determined how the PI-Controller is integrated or used in the unit.

Picture 6.11.2.a *Controller selection*

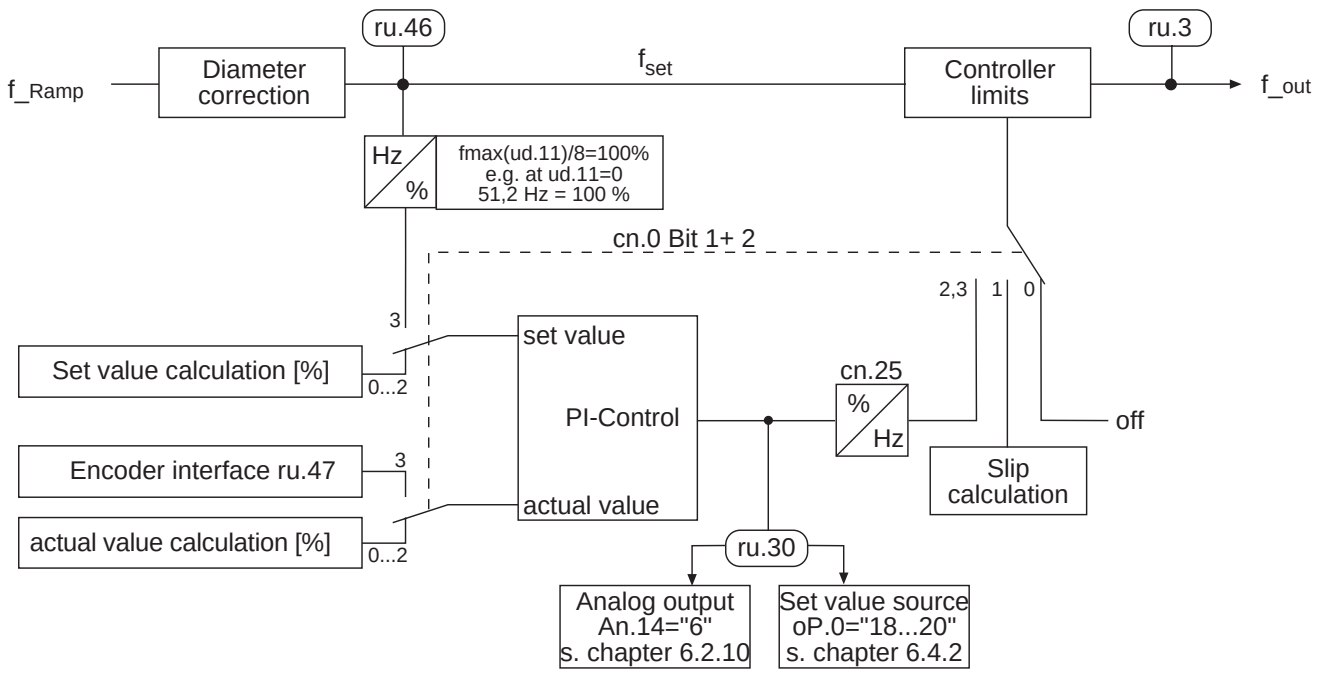

cn.0 Bit 1 and 2 = „0“ or „1“

the PI-Controller works like an external regulator. The controlled variable is displayed in ru.30.

It can be outputted on the analog output

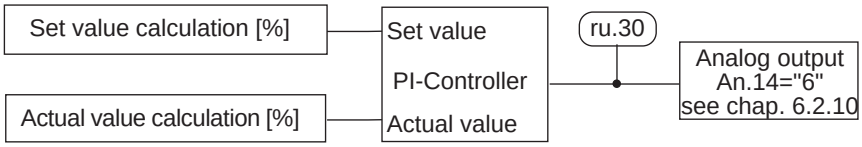

or used for the set value setting with oP.0 =18...20.

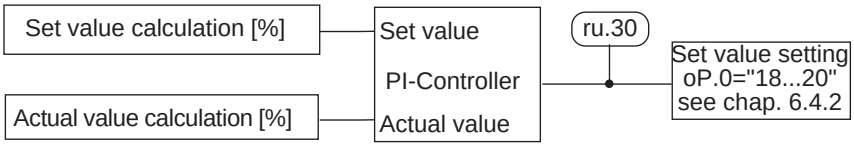

cn.0 Bit 1 and 2 = „2“

At this setting the PI-Controller changes the output frequency directly, i.e. the action takes place after the ramp generator. Typical application for this type of control is the dancing position control.

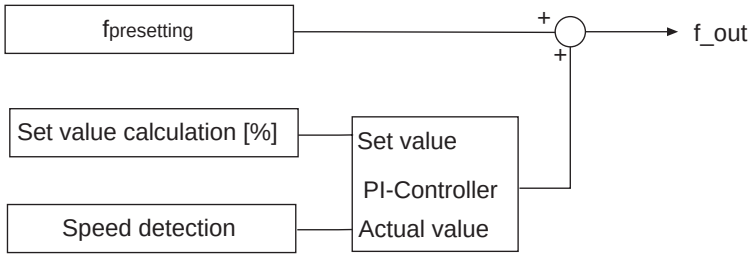

cn.0 Bit 1 and 2 = „3“ This setting requires the optional available speed detection card (see Chap. 6.9) to record the actual value. Speed controls with incremental encoder, tacho generator or pulse encoder can be set up.

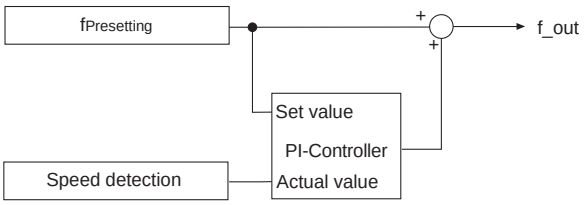

6.11.3 Autoboost and Slip Compensation

At high load torques autoboost causes an automatic I•R compensation by increasing the output voltage; the magnetizing current remains constant. The slip compensation compensates the speed changes caused by load changes.
The combination of both functions improves the performance over the entire speed range. During regenerative operation, only with positive voltage change, a smoother braking behaviour is adjusted with autoboost (cn.0 bit 7).

1. Enter motor data (Cahpter 6.6)
2. Activate autoboost and slip compensation (see cn.0)
3. Adjust parameter cn.1 and cn.2 to „0.00“
4. Measure the speed on idling machine. Put a load on the machine and repeat the measurement. If nesessary, adjust parameters cn.1 and cn.2 to the desired speed/torque performance characteristic.
5. Take the load off the machine. Check, whether voltage and frequency are reduced again.

Picture 6.11.3 Autoboost and slip compensation

a) No frequency rise, speed decays => no controller activated or adjusted too low.

b) Frequency is increased, speed decays => voltage rise too little or not existing.

c) No frequency rise, speed decays => frequency rise too little or not existing.

d) Speed is maintained after a short adjustment phase => optimal setting.

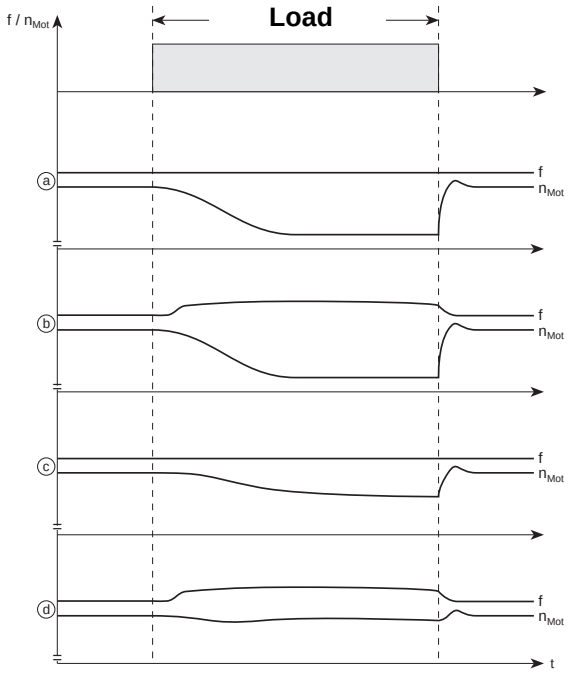

6.11.4 Set Value Calculation %

The percental set value is effective with the setting cn.0 Bit1+2="0…2". It is adjusted with cn.15. Adding to it one of three analog channels or the output frequency can be selected with cn.13. The operating range of the output frequency is adjusted with cn.10 and cn.11. With cn.13 and cn.14 the effect of the adding set value is determined. If no adding set value is effective, cn.12 must be adjusted to „3" and cn.14 to „0".

Picture 6.11.4 PI-Controller percental set value calculation

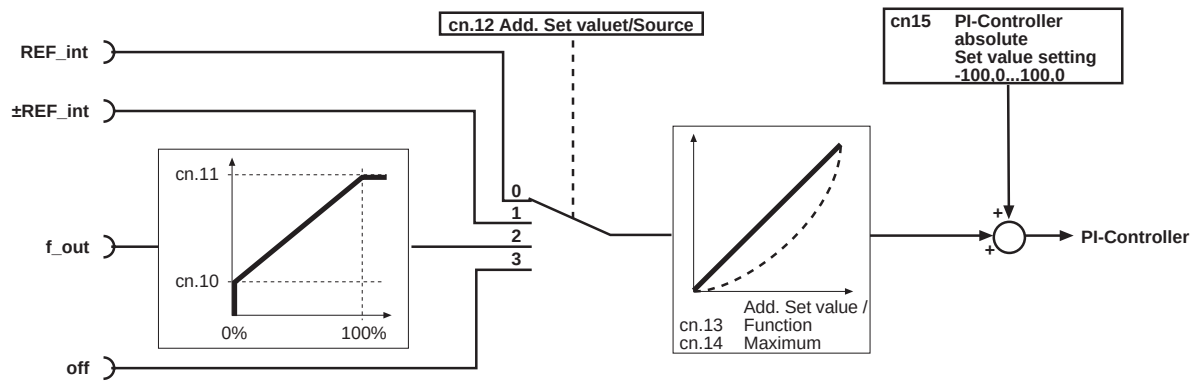

PI-Controller Absolute set value setting (cn.15)

With cn.15 the set value of the PI-Controller is preset digitally in the range of -100,0...100,0%. The parameter is set-programmable.

Adding set value (cn.10...cn.14)

With parameters cn.10…cn.14 an additional set value can be deterimed for the PI-Controller. This value acts adding to the absolute set value (cn.15).

! If an adding set value is not desired, cn.12 must be adjusted to „3" and cn.14 to „0".

Parameter cn.12 specifies the input from which the adding set value is supplied. Following possiblities are selectable:

cn.12	Set value source
0	REF (standard)
1	±REF
2	output frequency (f_out)
3	off

If one of the analog channels is adjusted, the signals can be individually adapted to the requirements with the analog amplifier, as decribed in Chapter 6.2.

cn.10, cn.11

If the output frequency is adjusted as adding set value, the operating range of 0…100% can be determined with cn.10 and cn.11 as follows:
As shown in the picture, it results in following connections:

Output frequency	Adding set value
f_out < cn.10	0%
cn.10 < f_out < cn.11	(f_out - cn.10) x 100% / (cn.11-cn.10)
f_out > cn.11	100%

© KEB Antriebstechnik, 1997
All Rights reserved

Picture 6.11.4 Adding set value function

cn.11 Maximum frequency = 0,0...409,5875 Hz

cn.10 Minimum frequency= 0,0...409,5875 Hz

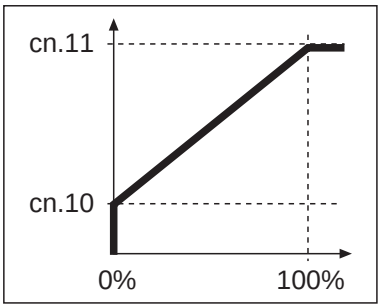

The adding set value can be influenced by an adjustable function Out%=f(In%) in cn.13. At cn.13 = „1 or 2“ the max. Out%-Value is determined with cn.14. Following adjustments are possible:

cn.13, cn.14

cn.13	Function
0	Out% = In% (linear without limitation)
1	Out% = (In% / 100%) · cn.14 (linear with limitation to cn.14)
2	Out% = (In% / 100%)² · cn.14 (parabolic with limitation to cn.14)
3	Out% = -In% (linear inverted without limitation)

© KEB Antriebstechnik, 1997
All Rights reserved

6.11.5 Actual Value Calculation %

The percental actual value is effective at the setting cn.0 Bit1+2= „0…2“. One of three analog channels, the active current, the load or a fixed preset value can be used as actual value. With cn.20 the source of the actual value signal is determined.

Picture 6.11.5 Percental actual value calculation

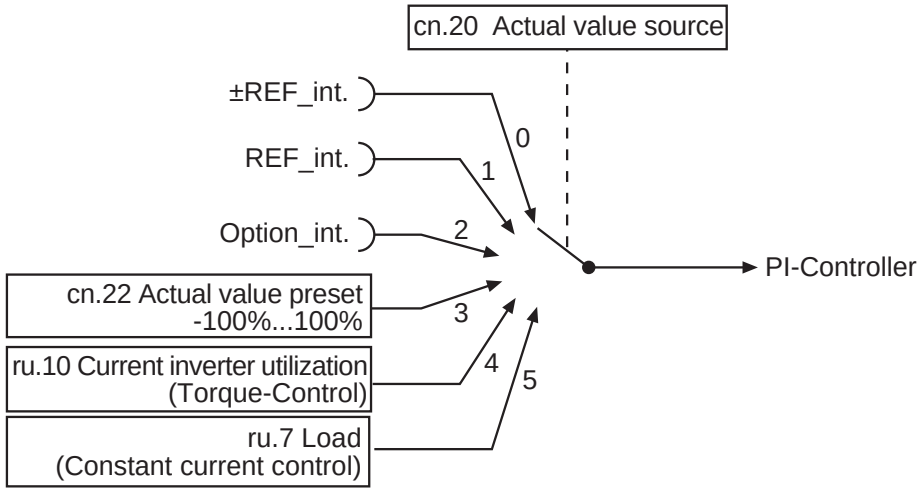

Actual value source (cn.20)

The actual value source (cn.20) determines from where the PI-Controller receives the actual value signal. Following signal are available:

cn.20	Signal	Function
0	±REF_internal	Signal of ±REF-input at the output of zero point hysteresis An.2 (see Chap. 6.2)
1	REF_internal	Signal of REF-input at the output of zero point hysteresis An.8 (see Chap. 6.2)
2	Option_internal	Signal of optional input at the output of zero point hysteresis An.2 (see Chap. 6.2)
3	Setting with cn.22	Actual value is preset with cn.22 in the range of -100,0...100,0%
4	Active current	The active current 0…200% displayed in parameter ru.10 is used as actual value signal (100% = I_{rated})
5	Load	The load 0…200 % displayed in parameter ru.7 is used as actual value signal (100% = I_{rated})

6.11.6 Diameter Compensation

Picture 6.11.6 Diameter compensation

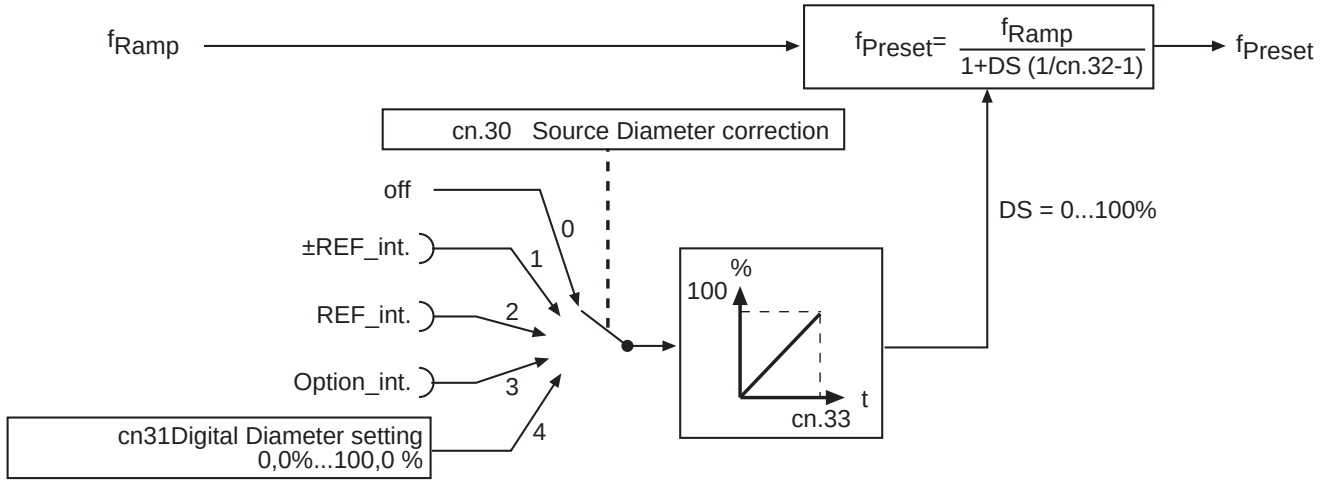

By the use of the diameter compensation the feedrate of the wrapping material can be maintained constant while the diameter of the winding bale changes. For this purpose the diameter of the winding bale must be preadjusted. The source, from which the program receives the information about the actual diameter, is selected with cn.30. Following sources are possible:

Source diameter compensation (cn.30)

cn.30	Source diameter compensation	
0	OFF	No correction (diameter signal = 0%)
1	REF±	Diameter signal via REF±
2	REF	Diameter signal via REF
3	AN-OPT	Diameter signal via the optional analog channel
4	cn.31	Diameter signal via cn.31

The diameter signal is evaluated in the range of 0% up to 100 %. Values< 0% are set to 0%, values > 100% are limited to 100%.
A diameter signal of 0% corresponds to the minimum diameter of the winding bale (d_{min}). In this case the output frequency of the ramp generator is not changed. A diameter signal of 100% corresponds to the maximum diameter of the winding bale (d_{max}). To calculate the frequency change the program requires the relation of minimum to maximum diameter (d_{min}/d_{max}).

Digital diameter setting (cn.31)

Through cn.31 the diameter signal can be set digital in the range of 0…100%.

Diameter relation (cn.32)

The relation of minimum to maximum diameter (d_{min}/d_{max}) is set with cn.32 and adjustable in the range of 0,01…0,99 with a resolution of 0,001.

The corrected output frequency of the ramp generator is calculated as follows:

$$f_Preset = \frac{f_Ramp}{1 + DS \bullet (1/cn.32 - 1)}$$

f_Ramp: Output frequency of ramp generator
f_Setting: Corrected output frequency
DS: Diameter signal 0 - 100% (0 to 1)
cn.32: (d_{min}/d_{max})

© KEB Antriebstechnik, 1997
All Rights reserved

Inc/dec-time for diameter signal (cn.33)

The rate of change of the diameter signal can be limited through a ramp generator. With cn.33 the time, that is required for a signal difference of 0…100%, can be adjusted in the range of 0,0…300s,

6.11.7 Controller Action and Limiting

The manipulated variable coming from the PI-Controller is limited with cn.27. In the summation point the speed precontrol is added to the manipulated variable. The parameters oP.32 and oP.33 limit the output frequency.

Picture 6.11.7 Controller action and limiting

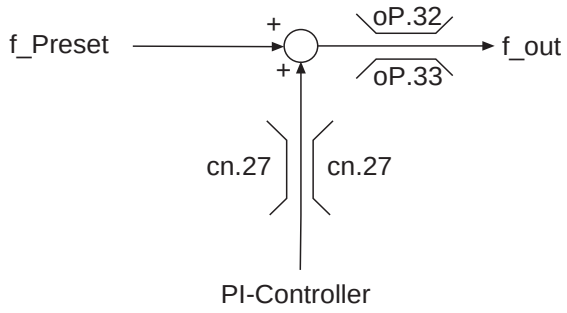

PI-Frequency limit (cn.27)

With cn.27 the maximum frequency change through the PI-Controller is determined. The frequency can be specified in the range of 0…204,78 Hz with a resolution of 0,0125 Hz. The value applies to both directions of rotation.

Maximum output frequency clockwise rotation (oP.32) counter-clockwise rotation oP.33)

These parameters limit the output frequency to the adjusted value. The limits are necessary to permit the operation of the controller in the permissible operating range of the application. All other limits (oP.4…oP.9) limit the setpoint value only, but not the output frequency.

It is imperative to adjust these parameters for controlled operation to avoid damages to the machine!

Change of rotational direction (cn.0 Bit3)

With cn.0 Bit 3 it is determined whether a change of rotational direction s possible, when the sum of precontrol and manipulated variable is negative. This means that this function must be deactivated for machines that are designed for one rotational direction only.

Controller inverse amplification factor at 0Hz (cn.0 Bit4)

To avoid fluctuations around 0Hz, the controller inverse amplification factor can be disabled when the speed control is activated and no specified frequency is set. This function is activated with cn.0 Bit 4 (see 6.11.2).

Freezing of I-component (cn.0 Bit5)

If the frequency limit or one of the max. output frequencies is reached, the I-component of the controller can be frozen for as long as the limiting is active. This function is activated with parameter cn.0 Bit 5 (see 6.11.2).

© KEB Antriebstechnik, 1997
All Rights reserved

6.11.8 Used Parameters

Param.	Adr.	R/W	PROG.	ENTER	min	max	Step	default	
ru.3	2003h	-	-	-	-409,5875Hz	409,5875Hz	0,0125Hz	-	-
ru.30	201Eh	-	-	-	-100,0%	100,0%	0,1%	-	-
ru.46	202Eh	-	-	-	-409,5875Hz	409,5875Hz	0,0125Hz	-	-
ru.47	202Fh	-	-	-	-	-	0,0125Hz	-	-
cn.0	2500h	✔	✔	-	0	255	1	3	bit-coded
cn.1	2501h	✔	✔	-	-2,50	2,50	0,01	0,0	-
cn.2	2502h	✔	✔	-	-2,50	2,50	0,01	0,0	-
cn.3	2503h	✔	✔	-	0	2	1	0	-
cn.10	250Ah	✔	✔	-	0Hz	409,5875Hz	0,0125Hz	10Hz	-
cn.11	250Bh	✔	✔	-	0Hz	409,5875Hz	0,0125Hz	50Hz	-
cn.12	250Ch	✔	-	-	0	3	1	0	-
cn.13	250Dh	✔	✔	-	0	3	1	0	-
cn.14	250Eh	✔	✔	-	0,0%	100%	0,1%	100%	-
cn.15	250Fh	✔	✔	-	-100%	100%	0,1%	0,0%	-
cn.16	2510h	✔	✔	-	0,0	250,0	0,01	0	-
cn.17	2511h	✔	✔	-	0,0	30,0	0,001 s	0,0	-
cn.18	2512h	✔	-	-	0,0%	100,0%	0,1%	100,0%	-
cn.19	2513h	✔	-	-	-100,0%	0,0%	0,1%	-100,0%	-
cn.20	2514h	✔	-	-	0	5	1	0	-
cn.21	2515h	✔	✔	-	0	2	1	0	-
cn.22	2516h	✔	-	-	-100,0%	100,0%	0,1%	0,0%	-
cn.25	2519h	✔	-	-	0,0Hz/%	3,0Hz/%	0,001Hz/%	0,01Hz/%	-
cn.26	251Ah	✔	-	-	-0,01s	300,0 s	0,01 s	0,0	-
cn.27	251Bh	✔	-	-	0Hz	204,7875Hz	0,0125Hz	25,0Hz	-
cn.30	251Eh	✔	-	-	0	4	1	0	-
cn.31	251Fh	✔	-	-	0,0%	100,0%	0,1%	50,0%	-
cn.32	2520h	✔	-	-	0,01	0,99	0,001	0,5	-
cn.33	2521h	✔	-	-	0,0s	300,0s	0,01s	5,00s	-

© KEB Antriebstechnik, 1997
All Rights reserved

1. Introduction

2. Summary

3. Hardware

4. Operation

5. Parameter

6. Functions

7. Start-up

8. Special Operation

9. Error Assistance

10. Project Planning

11. Networks

12. Applications

13. Annex

6.1 Operating and Appliance Displays

6.2 Analog In- and Outputs

6.3 Digital In- and Outputs

6.4 Set Value and Ramp Adjustment

6.5 Voltage/Frequency (U/f) Characteristic

6.6 Motor Presetting

6.7 Keep on Running Functions

6.8 Parameter Sets

6.9 Special Functions

6.10 Encoder Interface

6.11 PI-Controller

6.12 CP-Parameter Definition

6.12.1 Survey 3
6.12.2 Assignment of CP-Parameter 4
6.12.3 Start Parameter 4
6.12.4 Example 5
6.12.5 Used Parameters 5

© KEB Antriebstechnik, 1997
All Rights reserved

6.12 CP-Parameter Definition

Once the development stage of a machine is completed only a few parameters are usually needed for the readjustment or the control of the inverter. To simplify the handling and the user documentation and to improve the safety of operation by eliminating unauthorized access, it is possible to create an own operator interface - the CP-parameters. For that purpose 25 parameters (CP.0…CP.24) are available and 24 of them (CP.1…CP.24) are free to assign.

6.12.1 Survey

Picture 6.12.1 Definition structure

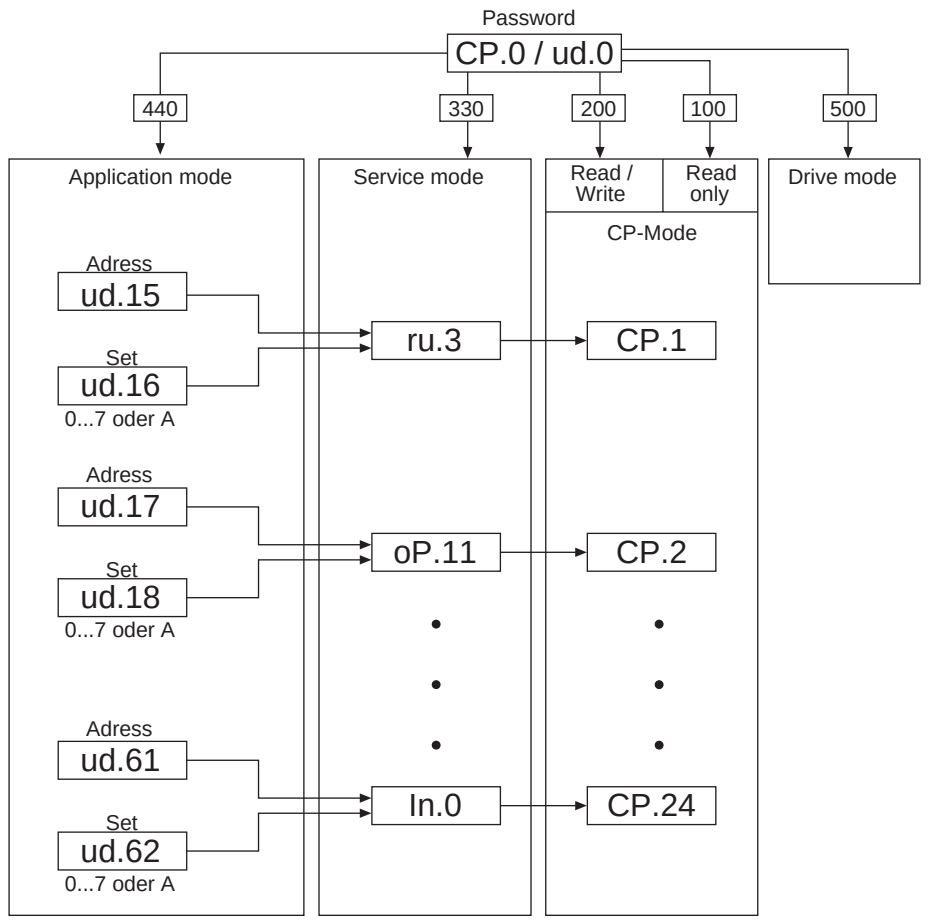

With two ud-parameters the parameter to be displayed is defined by its address and the respective set. Depending on the adjusted password (CP.0 or ud.0)

- the adjusted parameter is displayed directly in the service-mode
- the adjusted parameter is displayed in the CP-mode as CP-parameter

Parameter CP.0 is not programmable and contains always the password input. If the inverter is in the application or the service-mode ud.0 is used for password input.
The parameters ud.15 up to ud.62 as well as Fr.0 and Fr.1 are not permissible as CP-parameter and are therefore acknowldged as invalid address. When entering an invalid parameter address the parameter is set to „oFF“ (-1). The corresponding CP-parameter is not represented at this setting.

© KEB Antriebstechnik, 1997
All Rights reserved

6.12.2 Assignment of CP-Parameter

The following list shows the assignment of the ud-parameters to the CP-parameters. The first parameter determines the parameter address (see Chap. 5) of the parameter to be displayed, the second parameter determines the parameter set in which the values shall be displayed / changed. Adustable as parameter set is set 0…7 or the active set (A). At „active set“ the parameter set number is additionally displayed in the 1. digit of the display, to show which set is actually edited.

ud.15 ud.16	= CP.1	ud.39 ud.40	= CP.13
ud.17 ud.18	= CP.2	ud.41 ud.42	= CP.14
ud.19 ud.20	= CP.3	ud.43 ud.44	= CP.15
ud.21 ud.22	= CP.4	ud.45 ud.46	= CP.16
ud.23 ud.24	= CP.5	ud.47 ud.48	= CP.17
ud.25 ud.26	= CP.6	ud.49 ud.50	= CP.18
ud.27 ud.28	= CP.7	ud.51 ud.52	= CP.19
ud.29 ud.30	= CP.8	ud.53 ud.54	= CP.20
ud.31 ud.32	= CP.9	ud.55 ud.56	= CP.21
ud.33 ud.34	= CP.10	ud.57 ud.58	= CP.22
ud.35 ud.36	= CP.11	ud.59 ud.60	= CP.23
ud.37 ud.38	= CP.12	ud.61 ud.62	= CP.24

6.12.3 Start Parameter (ud.2, ud.3)

The parameter, that is to be displayed after switch-on of the inverter, is selected with the parameter „Start parameter group“ (ud.2) and „Start parameter number“ (ud.3). For that the desired parameter group is adjusted in ud.2, the desired parameter number is adjusted in ud.3. The parameter set is always set 0. If the combination of ud.2 and ud.3 results in a parameter that does not exist, or if the password level provided at switch-on is not sufficient to display the parameter, then the inverter starts with the display of ru.0.
If password level < 3 is active at switch-on, i.e. display of the user-defined parameter groups, then the adjustment of ud.2 is ignored, in that case ud.3 indicates the parameter number of the CP-parameter, whose value shall be displayed at the start. If this parameter does not exist, then CP.0 is indicated.

© KEB Antriebstechnik, 1997
All Rights reserved

6.12.4 Example

For example, a user menu with following characteristics shall be programmed:

1. Display of actual set frequency (ru.3) in the set valid at the time
2. Adjustment of a fixed frequency (oP.22) in set 2
3. Adjustment of a fixed frequency (oP.22) in set 3
4. Acceleration and deceleration time (oP.11/oP.12) in the set active at the time
5. Energy-saving factor (uF.7) shall be adjustable in set 0
6. On switch-on the active parameter set (ru.18) shall be displayed

1.) ud.15 = 2003 ; Parameter address for ru.3
ud.16 = A ; Display in the active set

2.) ud.17 = 2116 ; Parameter address for oP.22
ud.18 = 2 ; Preadjustment in set 2

3.) ud.19 = 2116 ; Parameter address for oP.22
ud.20 = 3 ; Preadjustment in set 3

4.) ud.21 = 210B ; Parameter address for oP.11
ud.22 = A ; Preadjustment in the set active at the time
ud.23 = 210C ; Parameter address for oP.12
ud.24 = A ; Preadjustment in the set active at the time

5.) ud.25 = 2307 ; Parameter address for uF.7
ud.26 = 0 ; Preadjustment in set 0

6. ud.27 = 2012 ; Parameter address for ru.18
ud.28 = A ; Display in the active set
ud.2 = 1 ; Display of ru-parameters (by activating the CP-mode this setting is ignored)
ud.3 = 7 ; Display of CP.7
adjust all other parameters to „off“ so that no indication occurs

6.12.5 Used Parameters

Param.	Adr.	R/W	PROG.	ENTER	min	max	Step	default	
ud.0	2600h	✔	-	✔	0	9999	1	cp_on	-
ud.1	2601h	✔	-	-	-32767	32767	1	cp_on	only visible by bus
ud.2	2602h	✔	-	-	1(ru)	13 (LE)	1	ru	ru/oP/Pn/uF/dr/cn/ud/Fr/An/di/do/LE/In
ud.3	2603h	✔	-	-	0	*255	*1	1	* dependent on parameter group
ud.13	260Dh	-	-	-	-	-	-	-	only visible by bus
ud.14	260Eh	-	-	-	-	-	-	-	only visible by bus
ud.15	260Fh	✔	-	-	-1 (off)	7FFF	1	2003	corresponds to ru.3
ud.16	2610h	✔	-	-	0	8	1	0	set 0...7; A(8) = active set

© KEB Antriebstechnik, 1997
All Rights reserved

Param.	Adr.	R/W	PROG.	ENTER	min	max	Step	default	
ud.17	2611h	✔	-	-	-1 (off)	7FFF	1	2000	corresponds to ru.0
ud.18	2612h	✔	-	-	0	8	1	0	set 0...7; A(8) = active set
ud.19	2613h	✔	-	-	-1 (off)	7FFF	1	2007	corresponds to ru.7
ud.20	2614h	✔	-	-	0	8	1	0	set 0...7; A(8) = active set
ud.21	2615h	✔	-	-	-1 (off)	7FFF	1	2008	corresponds to ru.8
ud.22	2616h	✔	-	-	0	8	1	0	Set 0...7; A(8) = active set
ud.23	2617h	✔	-	-	-1 (off)	7FFF	1	2300	corresponds to uF.0
ud.24	2618h	✔	-	-	0	8	1	0	set 0...7; A(8) = active set
ud.25	2619h	✔	-	-	-1 (off)	7FFF	1	2301	corresponds to uF.1
ud.26	261Ah	✔	-	-	0	8	1	0	set 0...7; A(8) = active set
ud.27	261Bh	✔	-	-	-1 (off)	7FFF	1	210B	corresponds to oP.11
ud.28	261Ch	✔	-	-	0	8	1	0	set 0...7; A(8) = active set
ud.29	261Dh	✔	-	-	-1 (off)	7FFF	1	210C	corresponds to oP.12
ud.30	261Eh	✔	-	-	0	8	1	0	set 0...7; A(8) = active set
ud.31	261Fh	✔	-	-	-1 (off)	7FFF	1	2104	corresponds to oP.4
ud.32	2620h	✔	-	-	0	8	1	0	set 0...7; A(8) = active set
ud.33	2621h	✔	-	-	-1 (off)	7FFF	1	2105	corresponds to oP.5
ud.34	2622h	✔	-	-	0	8	1	0	set 0...7; A(8) = active set
ud.35	2623h	✔	-	-	-1 (off)	7FFF	1	2116	entspricht oP.22
ud.36	2624h	✔	-	-	0	8	1	0	set 0...7; A(8) = active set
ud.37	2625h	✔	-	-	-1 (off)	7FFF	1	2117	corresponds to oP.23
ud.38	2626h	✔	-	-	0	8	1	0	set 0...7; A(8) = active set
ud.39	2627h	✔	-	-	-1 (off)	7FFF	1	2118	corresponds to oP.24
ud.40	2628h	✔	-	-	0	8	1	0	set 0...7; A(8) = active set
ud.41	2629h	✔	-	-	-1 (off)	7FFF	1	2205	corresponds to Pn.5
ud.42	262Ah	✔	-	-	0	8	1	0	set 0...7; A(8) = active set
ud.43	262Bh	✔	-	-	-1 (off)	7FFF	1	220D	corresponds to Pn.13
ud.44	262Ch	✔	-	-	0	8	1	0	set 0...7; A(8) = active set
ud.45	262Dh	✔	-	-	-1 (off)	7FFF	1	2207	corresponds to Pn.7
ud.46	262Eh	✔	-	-	0	8	1	0	set 0...7; A(8) = active set
ud.47	262Fh	✔	-	-	-1 (off)	7FFF	1	2308	corresponds to uF.8
ud.48	2630h	✔	-	-	0	8	1	0	set 0...7; A(8) = active set
ud.49	2631h	✔	-	-	-1 (off)	7FFF	1	2501	corresponds to cn.1
ud.50	2632h	✔	-	-	0	8	1	0	set 0...7; A(8) = ative set

© KEB Antriebstechnik, 1997
All Rights reserved

Param.	Adr.	R/W	PROG.	ENTER	min	max	Step	default	
ud.51	2633h	✔	-	-	-1 (off)	7FFF	1	2502	corresponds to cn.2
ud.52	2634h	✔	-	-	0	8	1	0	set 0...7; A(8) = active set
ud.53	2635h	✔	-	-	-1 (off)	7FFF	1	2208	corresponds to Pn.8
ud.54	2636h	✔	-	-	0	8	1	0	set 0...7; A(8) = active set
ud.55	2637h	✔	-	-	-1 (off)	7FFF	1	220B	corresponds to Pn.11
ud.56	2638h	✔	-	-	0	8	1	0	set 0...7; A(8) = active set
ud.57	2639h	✔	-	-	-1 (off)	7FFF	1	2A02	corresponds to do.2
ud.58	263Ah	✔	-	-	0	8	1	0	set 0...7; A(8) = active set
ud.59	263Bh	✔	-	-	-1 (off)	7FFF	1	2B02	corresponds to LE.2
ud.60	263Ch	✔	-	-	0	8	1	0	set 0...7; A(8) = active set
ud.61	263Dh	✔	-	-	-1 (off)	7FFF	1	2806	corresponds to An.6
ud.62	263Eh	✔	-	-	0	8	1	0	set 0...7; A(8) = active set

© KEB Antriebstechnik, 1997
All Rights reserved

1. Introduction

2. Summary

3. Hardware

4. Operation

5. Parameter

6. Functions

7. Start-up

8. Special Operation

9. Error Assistance

10. Project Planning

11. Networks

12. Applications

13. Annex

7.1 Preparatory Measures

7.2 Initial Start-up

7.1.1 After uncasing the Goods 3
7.1.2 Installation and Connection 4
7.1.3 Checklist prior to Start-up 5

7. Start-up

The following chapter is intended for everybody who has no experience with the KEB frequency inverters. It shall allow a correct entering into this field. But because of the complex application possibilities we must restrict ourselves to explaining the start-up of standard applications.

7.1 Preparatory Measures

7.1.1 After unpacking the Goods

After unpacking the goods and checking them for complete delivery following measures are to be carried out:

- ☑ Visual control for transport damage
- ☑ Insert operator, if ordered

Picture 7.1.1 Insertion of operator (example based on D-housing)

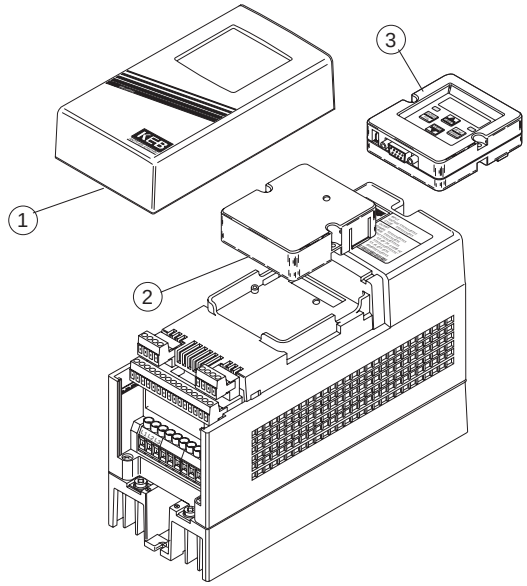

- ☑ Remove housing cover
- ☑ Remove the dummy cap
- ☑ Insert operator

7.1.2 Installation and Connection

The EMC-conform installation of the inverter is described in the Instruction Manual Part 1. Installation and connection instructions are found in the Instruction Manual Part 2.

Picture 7.1.2.a Installation and connection

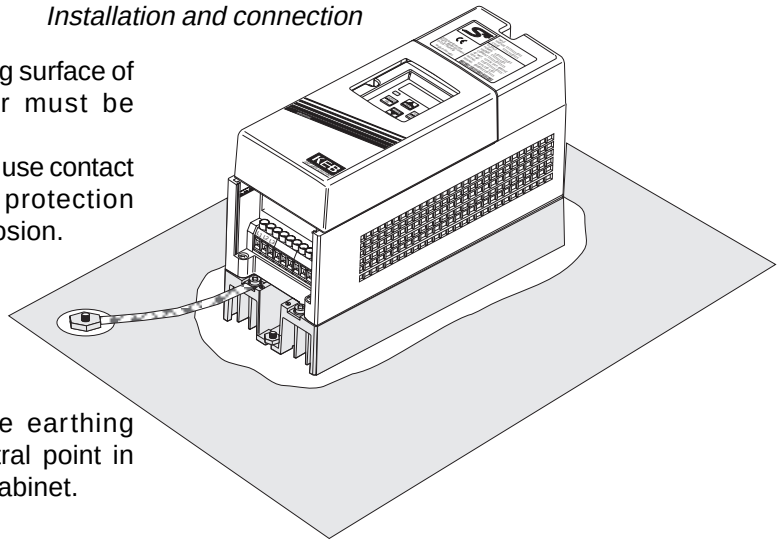

- ☑ The mounting surface of the inverter must be bright.
- ☑ If necessary, use contact lacquer as protection against corrosion.
- ☑ Connect the earthing strip to central point in the control cabinet.

© KEB Antriebstechnik, 1997
All Rights reserved

7.1.3 Checklist prior to Start-up

Before switching on the inverter go through the following checklist.

- ☑ Is the inverter firmly bolted in the control cabinet?
- ☑ Is there enough space to ensure sufficient air circulation?
- ☑ Are mains and motor cables as well as the control cables installed separately from each other?
- ☑ Are the inverters connected to the correct supply voltage?
- ☑ Are all mass and earthing cables attached and well contacted?
- ☑ Ensure that mains and motor cables are not interchanged as that will lead to the destruction of the inverter!
- ☑ Is the motor connected in-phase?
- ☑ Check tacho, initiator and encoder for firm attachment and correct connection!
- ☑ Check, whether all power and control cables are firmly in place!
- ☑ Remove any tools from the control cabinet!
- ☑ Attach all covers and protective caps to ensure that all live parts are secured against direct contact.
- ☑ When using measuring instruments or computers an isolating transformer should be used, if not, make sure that the equipotenial bonding between the supply lines is guaranteed!
- ☑ Open the control release of the inverter to avoid the unintended starting of the machine.

© KEB Antriebstechnik, 1997
All Rights reserved

1. Introduction

2. Summary

3. Hardware

4. Operation

5. Parameter

6. Functions

7. Start-up

8. Special Operation

9. Error Assistance

10. Project Planning

11. Networks

12. Applications

13. Annex

7.1 Preparatory Measures

7.2 Initial Start-up

7.2.1 Switching on of KEB COMBIVERT 3
7.2.2 Basic Settings in the CP-Mode 4
7.2.3 Set value selection 4
7.2.4 Testing of Drive 5

7.2 Initial Start-up

After all preparatory measures have been carried out the KEB COMBIVERT F4 can be switched on.

7.2.1 Switching on of KEB COMBIVERT

The sequence of the switch-on procedure as shown below refers to supplied units with factory setting. Because of the multitude of programs we cannot take into consideration customer-specific adjustments.

Picture 7.2.1 Swtich on of KEB COMBIVERT

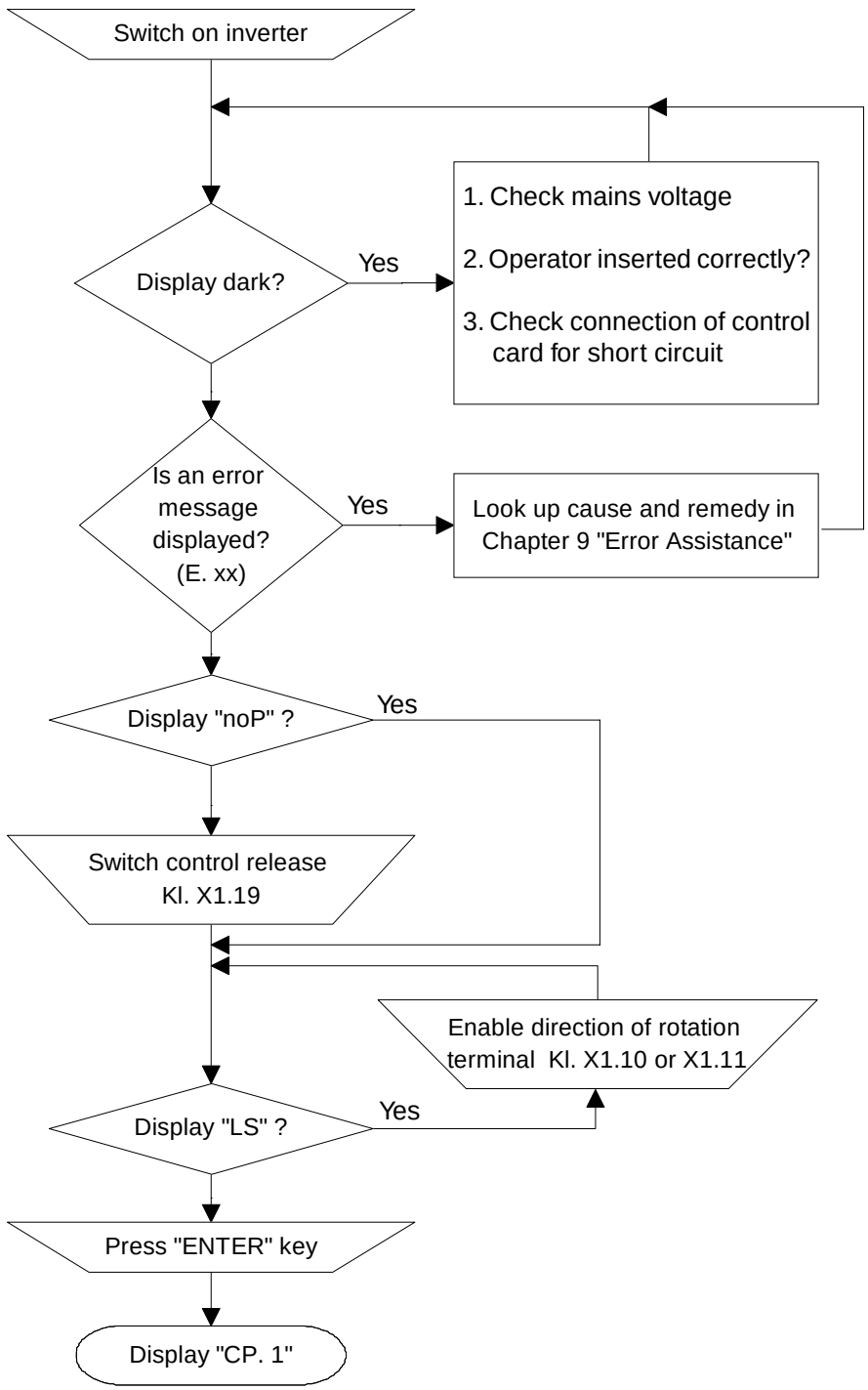

© KEB Antriebstechnik, 1997
All Rights reserved

7.2.2 Basic Settings in the CP-Mode

After switch-on with factory setting the inverter is in the CP-Mode. The preadjusted values can be used for 90 % of all applications at the initial start-up. However, the following parameters should be checked and, if necessary, adjusted.

- ☑ Corner frequency CP.5
- ☑ Minimum and maximum frequency CP.9/CP.10
- ☑ Acceleration and decelerationtimes CP.7/CP.8
- ☑ Boost CP.6

7.2.3 Set value selection

After the basic settings have been made, it must now be determined how the set value input is done.

Picture 7.2.3 Setvalue input

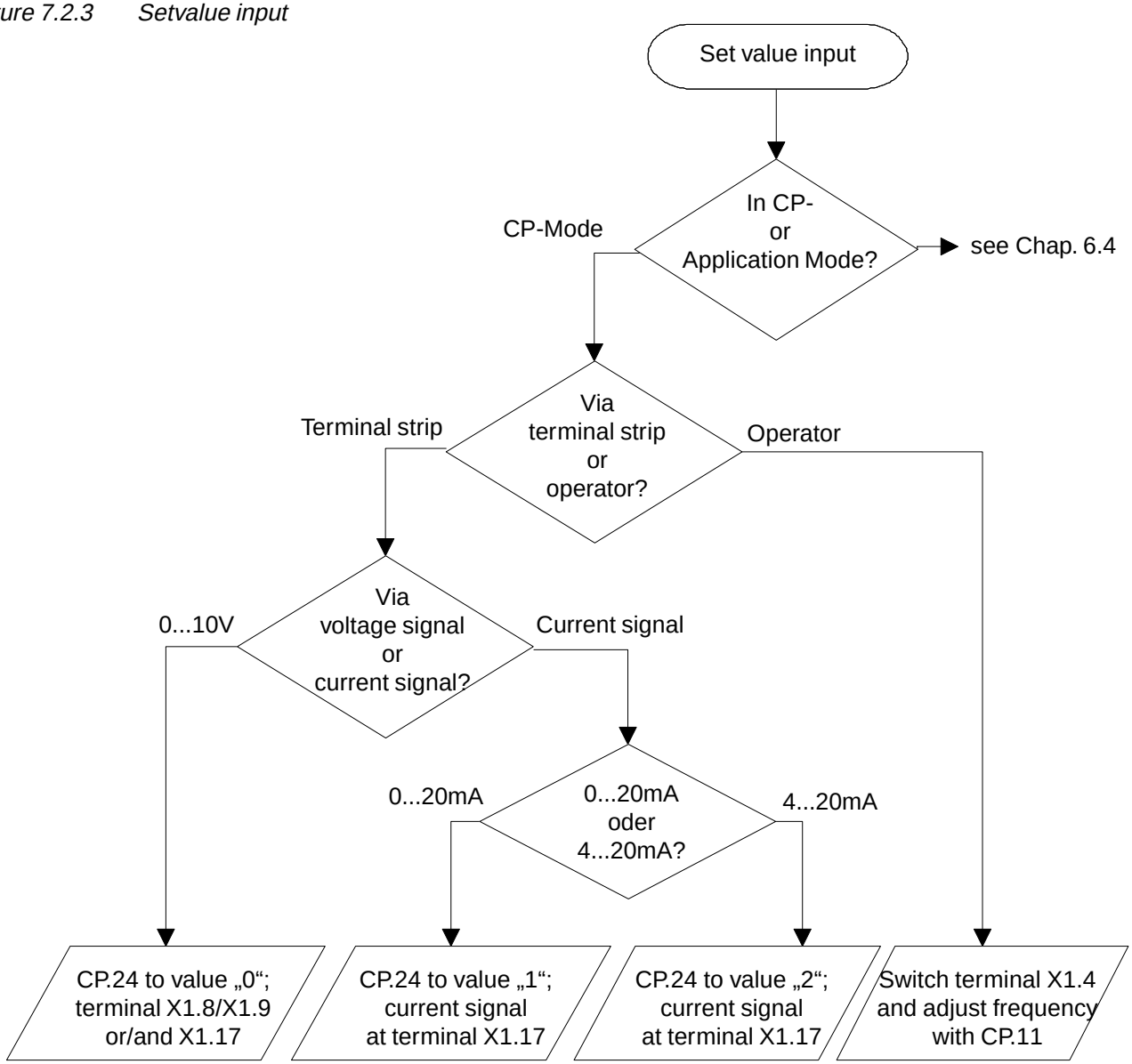

7.2.4 Testing of Drive

For the drive to always allow a save controlling through the inverter, carry out the following test under the most adverse operating conditions.

Picture 7.2.4 Testing of drive

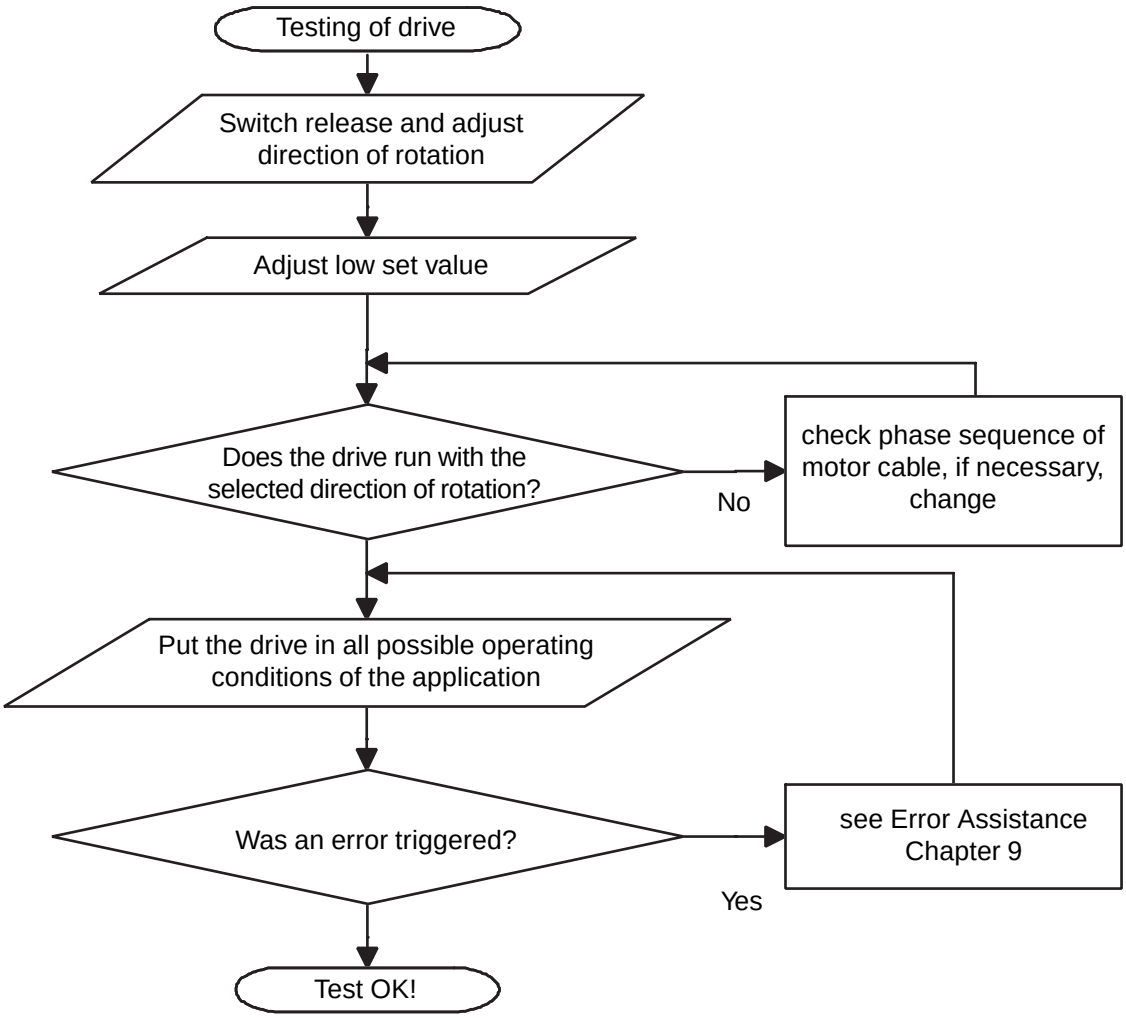

1. Introduction

2. Summary

3. Hardware

4. Operation

5. Parameter

6. Functions

7. Start-up

8. Special Operation

9. Error Assistance

10. Project Planning

11. Networks

12. Applications

13. Annex

Is currently updated and will soon be available on Internet http://www.keb.de

8. Special Operation

© KEB Antriebstechnik, 1997
All Rights reserved

1. Introduction

2. Summary

3. Hardware

4. Operation

5. Parameter

6. Functions

7. Start-up

8. Special Operation

9. Error Assistance

9.1 Troubleshooting

9.1.1 General 3
9.1.2 Error Messages and their Cause 5

10. Project Planning

11. Networks

12. Applications

13. Annex

© KEB Antriebstechnik, 1997
All Rights reserved

9. Error Assistance

The following chapter shall help you to avoid errors as well as help you to determine and remove the cause of errors on your own.

9.1 Troubleshooting

9.1.1 General

If error messages or malfunctions occur repeatedly during operation, the first thing to do is to pinpoint the exact error. To do that go through the following checklist:

- Is the error reproducable ?
For that reset the error and try to repeat it under the same conditions. If the error can be reproduced, the next step is to find out during which operating phase the error occurs.

- Does the error occur during a certain operating phase (e.g. always during acceleration)?
If so, consult the error messages and remove the causes listed there.

- Does the error occur or disappear after a certain time?
That may be an indication for thermal causes. Check, whether the inverter is used in accordance to the ambient conditions and that no moisture condensation takes place.

9.1.2 Error Messages and their Cause

Error messages are always represented by an „E“ and the corresponding error in the display of KEB COMBIVERT. In the following the displayed indications and their causes are described.

Undervoltage E. UP	Occurs when the DC-link voltage drops below the permissible value. Causes: - input voltage too low or instable - inverter rating too low - voltage losses through wrong wiring - supply voltage from generator/transformer breaks down at very short ramps - one phase of input voltage missing (ripple detection)
Overvoltage E. OP	Occurs when the DC-link voltage rises above the permissible value. Causes: - input voltage too high - interference voltages at the input - deceleration ramp too short
Overcurrent E. OC	Occurs when the specified peak current is exceeded. Causes: - acceleration ramps too short - the load is too high at disabled acceleration stop and disabled constant current limit - short circuit at the output - ground fault - deceleration ramp too short - motor cable too long - EMC

© KEB Antriebstechnik, 1997
All Rights reserved

Overlaod E. OL	Occurs when a too large load is applied longer than the permissible time allows (see Technical Data). Causes: - mechanical fault or overload in the application - wrong dimensioned inverter - wrong wired motor
Cooling phase completed E.nOL	After the error E. OL a cooling time must elapse. This message appears after the cooling phase is completed. The error can be reset.
Overtemperature E. OH	Occurs when the heat sink temperature rises above the permissible limit (see Technical Data). Causes: - insufficient cooling - ambient temperature too high - fan clogged
Motor protective relay E.OH2	Occurs when the eletronic motor protective relay (Pn.3 = 3 or 4) trips (also refer to 6.7.4).
ext. Overtemperature E.dOH	Occurs when the external temperature monitoring trips. Causes: - resistance at terminals OH/OH >1650 Ohm - motor overloaded - open circuit to temperature sensor
no Overtemperature E.nOH	Internal or external overtemperature error no longer exists. Error "E. OH" or "E.dOH" can be reset.
Load shunt error E.LSF	Load shunt not bridged, occurs for a short time during the switch on phase, but must be automatically reset immediately. If the error message remains, it may have following causes. - load shunt defect - input voltage wrong or too low - high losses in the supply line - wrong connected braking resistor - braking module defect
Set selection error E.SEt	**E**rror **SEt** occurs, when trying to select a locked parameter set.
Bus error E.buS	**E**rror **buS**; for bus operation a monitoring time (Watchdog time ud.8) can be adjusted. The error is triggered when no telegrams are received within the the adjusted time.
External fault E. EF	**E**rror **E**xternal **F**ault is triggered, when a digital input is being programmed as external error input (di. 3...di.10 = 6) and trips.
Power unit code E.PuC	**E**rror **P**ower **u**nit **C**ode invalid; during the initialization phase the power unit was not identified or detected as non-permissible.

© KEB Antriebstechnik, 1997
All Rights reserved

Error brake E. br	This error may occur at activated brake control (see Chapter 6.9.6.) if the load is below the minimum load level (Pn.58) during start up.
Error calculation speed E.co1 **Error calculation frequency** E.co2	To indicate overshooting and unpermissble limits the speed measurement generates the error message E.co1 / E.co2. This error occurs when in any section of the speed or frequency calculation a speed > 9999 min^{-1} or a frequency > 409,6 / 819,2 Hz occurs. Inverter status E.co1 = 54 Inverter status E.co2 = 55
Error hybrid E.hyb	Error of the control circuit ; switch off the inverter and wait as long until the display is dark. Then switch on the inverter. If the error still occurs, the control circuit is damaged and must be back to the factory.

© KEB Antriebstechnik, 1997
All Rights reserved

1. Introduction

2. Summary

3. Hardware

4. Operation

5. Parameter

6. Functions

7. Start-up

8. Special Operation

9. Error Assistance

10. Project Planning

10.1 General Design

10.1.1 Control Cabinet Design Calculation 3

10.1.2 Design of Braking Resistors 5

10.2 Drive Design

11. Networks

12. Applications

13. Annex

© KEB Antriebstechnik, 1997
All Rights reserved

10. Project Planning

The following chapter shall assist you in the planning stage of applications.

10.1 General Design

10.1.1 Control Cabinet Design Calculation

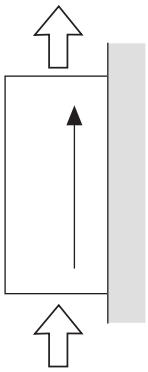

Direction of cooling fins

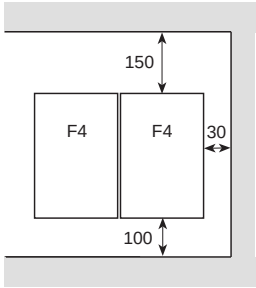

Minimum distances

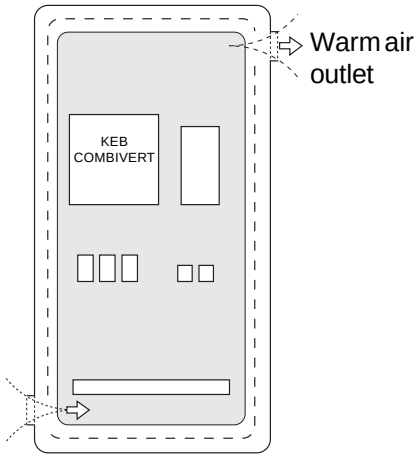

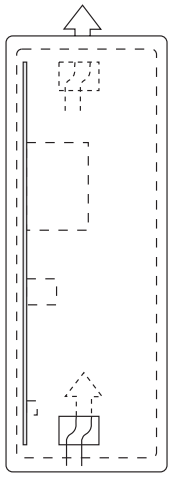

Control cabinet surface

Calculation of control cabinet surface:

$$A = \frac{P_V}{\Delta T \cdot K} \quad [m^2]$$

Air flow rate with fan cooling :

$$V = \frac{3{,}1 \cdot P_V}{\Delta T} \quad [m^3/h]$$

A = control cabinet surface [m²]
ΔT = temperature differential [K]
(standard value= 20 K)
K = coefficient of heat transmission $[\frac{W}{m^2 \cdot K}]$

(standard value = $5 \frac{W}{m^2 \cdot K}$)

P_V = power loss (see Technical Data)
V = air flow rate of fan

For more details please refer to the catalogs of the control cabinet manufacturers.

© KEB Antriebstechnik, 1997
All Rights reserved

10.1.2 Design of Braking Resistors

The COMBIVERT fitted with an external braking resistor or an external braking option is suitable for a limited 4-quadrant operation. The braking energy, refed into the DC-bus at generatoric operation, is dissipated over the braking transistor to the braking resistor.
The braking resistor heats up during the braking process. If it is installed in a control cabinet sufficient cooling of the control cabinet interior and sufficient distance to the KEB COMBIVERT must be observed.

Different braking resistors are available for the KEB COMBIVERT. Please refer to the next page for the corresponding formula and restrictions (valid range)

1. Preset desired braking time.

2. Calculate braking time without braking resistor (t_{Bmin}).

3. If the desired braking time shall be smaller than the calculated time, it is necessay to use a braking resistor. ($t_B < t_{Bmin}$)

4. Calculate braking torque (M_B). Take the load torque into account at the calculation.

5. Calculate peak braking power (P_B). The peak braking power must always be calculated for the worst case (n_{max} to standstill).

6. Selection of braking resistor:
   a) $P_R \geq P_B$
   b) P_N is to be selected according to the cycle time (c.d.f.).
   The braking resistors may be used only for the listed unit sizes. The maximum cyclic duration of a braking resistor shall not be exceeded.

6 % c.d.f.	= maximum braking time	8 s
25 % c.d.f.	= maximum braking time	30 s
40 % c.d.f.	= maximum braking time	48 s

   For longer cyclic duration times special designed braking resistors are necessary. The continuous output of the braking transistor must be taken into consideration.

7. Check, whether the desired braking time is attained with the braking resistor (t_{Bmin}).

   Restriction: Under consideration of the rating of the braking resistor and the brake power of the motor, the braking torque may not exceed 1.5times of the rating torque of the motor.
   When utilizing the maximum possible braking torque the frequency inverter must be dimensioned for the higher current.

© KEB Antriebstechnik, 1997
All Rights reserved

Braking time *DEC*

The braking time ***DEC*** is adjusted at the frequency inverter. If it is chosen too small the KEB COMBIVERT switches off automatically and the error message ***OP*** or ***OC*** appears. The approximate braking time can be determined according to following formulae.

Formula

1. Braking time without braking resistor

$$t_{Bmin} = \frac{(J_M + J_L) \cdot (n_1 - n_2)}{9{,}55 \cdot (K \cdot M_N + M_L)}$$

Valid range: $n_1 > n_N$

(Field weakening range)

2. Braking torque (necessary)

$$M_B = \frac{(J_M + J_L) \cdot (n_1 - n_2)}{9{,}55 \cdot t_B} - M_L$$

Condition: $M_B \leq 1.5 \cdot M_N$

$f \leq 70$ Hz

3. Peak braking power

$$P_B = \frac{M_B \cdot n_1}{9{,}55}$$

Condition: $P_B \leq P_R$

4. Braking time with braking resistor

$$t_{Bmin}* = \frac{(J_M + J_L) \cdot (n_1 - n_2)}{9{,}55 \cdot \left(K \cdot M_N + M_L + \frac{P_R \cdot 9{,}55}{(n_1 - n_2)}\right)}$$

Valid range: $n_1 > n_N$

Condition: $\frac{P_R \cdot 9{,}55}{(n_1 - n_2)} \leq M_N \cdot (1{,}5 - K)$

$f \leq 70$ Hz

$P_B \leq P_R$

K = 0,25 for motors up to 1,5 kW
0,20 for motors 2,2 to 4 kW
0,15 for motors 5,5 to 11 kW
0,08 for motors 15 to 45 kW
0,05 for motors 55 to 75 kW

J_M	=	mass moment of inertia motor	[kgm²]
J_L	=	mass moment of inertia load	[kgm²]
n_1	=	motor speed prior to deceleration	[min⁻¹]
n_2	=	motor speed after deceleration (standstill= 0 min⁻¹)	[min⁻¹]
n_N	=	rated motor speed	[min⁻¹]
M_N	=	rated motor torque	[Nm]
M_B	=	braking torque (necessary)	[Nm]
M_L	=	load torque	[Nm]
t_B	=	braking time (necessary)	[s]
t_{Bmin}	=	minimum braking time	[s]
t_Z	=	cycle time	[s]
P_B	=	peak braking power	[W]
P_R	=	peak power of braking resistor	[W]

Cyclic duration factor (cdf)

Cyclic duration factor for cycle time $t_Z \leq 120$ s

$$cdf = \frac{t_B}{t_Z} \cdot 100\ \%$$

Cyclic duration factor for cycle time $t_Z > 120$ s

$$cdf = \frac{t_B}{120\ s} \cdot 100\ \%$$

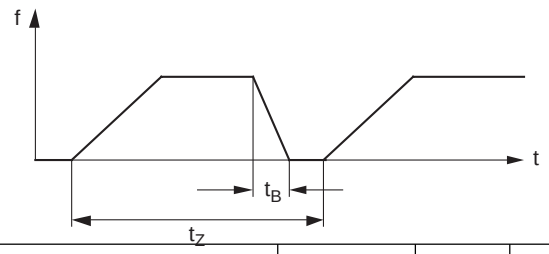

© KEB Antriebstechnik, 1997
All Rights reserved

© KEB Antriebstechnik, 1997
All Rights reserved

1. Introduction

2. Summary

3. Hardware

4. Operation

5. Parameter

6. Functions

7. Start-up

8. Special Operation

9. Error Assistance

10. Project Planning

10.1 General Design

10.2 Drive Design

11. Networks

12. Applications

13. Annex

Is currently completed and will be available shortly on INTERNET http://www.keb.de

10.2 Drive Design

© KEB Antriebstechnik, 1997
All Rights reserved

1. Introduction

2. Summary

3. Hardware

4. Operation

5. Parameter

6. Functions

7. Start-up

8. Special Operation

9. Error Assistance

10. Project Planning

11. Networks

12. Applications

13. Annex

11.1 Network Components

11.2 DRIVECOM Parameters

11.3 Connection Examples

11.1.1 Available Hardware 3
11.1.2 RS232-Cable PC/Inverter 3
11.1.3 Interface- and BUS-Operator .. 4
11.1.4 Optical Fibre BUS 5
11.1.5 InterBus Loop-Operator 9

11. Networks

The KEB COMBIVERT F4 can be easily integrated into different networks. For that the inverter is fitted with an operator or interface that corresponds to the bus system. Following hardware components are available:

11.1 Network Components

11.1.1 Available Hardware

– **RS232-Cable PC/Inverter**	**Part No..:**	**00.58.025-000D**
– **Interface Operator** serial network in RS232 or RS485-Standard	**Part No..:**	**00.F4.010-1009**
– **Bus Operator** serial network in RS485-Standard	**Part No..:**	**00.F4.010-7009**
– **InterBus Loop-Operator**	**Part No..:**	**00.F4.010-8009**
– **InterBus Remote Bus Interface (external)**	**Part No..:**	**00.B0.0BK-K001**
– **LON-Bus-Operator**	**Part No..:**	**00.F4.010-4009**
– **CAN-Bus-Operator**	**Part No..:**	**00.F4-010-5009**
– **Profibus-DP-Operator**	**Part No.:**	**00.F4.010-6009**
– **Optical fibre interface (Master)**	**Part No.:**	**00.F4.028-1009**
– **Optical fibre interface (Slave)**	**Part No.:**	**00.F4.028-1008**
– **Optical fibre operator**	**Part No.:**	**00.F4.010-A009**

11.1.2 RS232-Cable PC/ Inverter

The 3m-long cable serves for the direct RS232 connection of PC (9-poles or 25-poles SUB-D connector) and inverter.

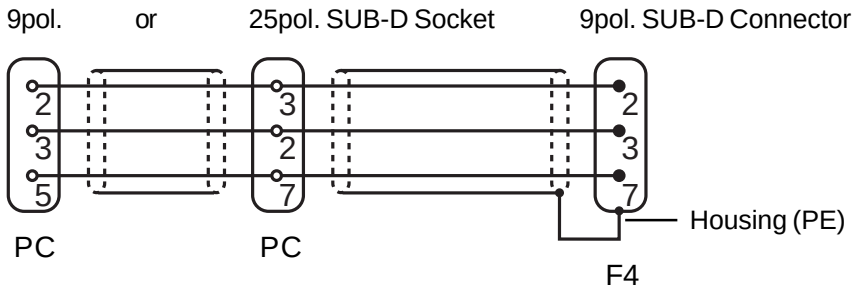

11.1.3 Interface- and Bus-Operator

Integrated into the Interface Operator (00.F4.010-1009) is an isolated RS232/RS485 interface. The RS232-interface is not applicable for the Bus-Operator (00.F4.010-7009). The telegram structure is compatible to protocol DIN 66019 and ANSI X3.28, sub catagory 2.5, A2, A4 and ISO 1745.

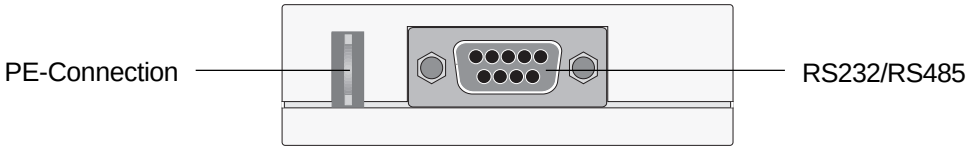

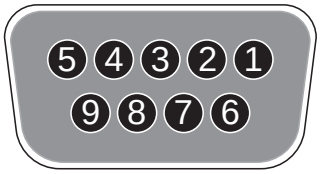

PIN	RS485	Signal	Significance
1	–	–	reserved
2	–	TxD	transmitter signal /RS232
3	–	RxD	receive signal /RS232
4	A'	RxD-A	receive signal A/RS485
5	B'	RxD-B	receive signal B/RS485
6	–	VP	supply voltage -Plus +5V (I_{max}=10mA)
7	C/C'	DGND	data reference potential
8	A	TxD-A	transmitter signal A/RS485
9	B	TxD-B	transmitter signal B/RS485

© KEB Antriebstechnik, 1996
All Rights reserved

11.1.4 Optical Fibre BUS

For the increasing automation and the thus connected rising number of interference sources the optical fibre represents an important part of the data transmission, since the optical fibre bus is insensitive to electromagnetic interferences.

The optical fibre interface is the link between the electric and the optical transmission.

The serial RS232-interface serves for the connection to data transmission equipment (e.g. PC, PLC). The data terminal equipment (e.g. frequency inverter with optical fibre-operator) are connected to the interface in ring-topology. For that all users (max. 239) must be active.

Components

Following components belong to the optical fibre system:

1.	Optical fibre interface (Master)	Part-No.: 00.F4.028-1009
2.	Optical fibre interface (Slave)	Part-No.: 00.F4.028-1008
3.	Optical fibre operator	Part-No.: 00.F4.010-0079
4.	RS 232 - cable	Part-No.: 00.58.025-000D

Advantage

- Noise-immune data transfer
- Simple connection
- Electrical isolation
- High transfer rates
- Simple BUS design

Disadvantages

- To get a BUS communication, all users must be active.

Description
Optical Fibre Interface

Pin assignment 9-pole SUB-D socket (Master)		
PIN	**Signal**	**Significance**
1	-	free
2	TxD	transmitter signal / RS232
3	RxD	receive signal / RS232
4	-	free
5	DGND	data reference potential
6	-	free
7	-	free
8	-	free
9	-	free

Pin assignment 9-pole SUB-D connector (Slave)		
PIN	**Signal**	**Significance**
1	-	free
2	TxD	transmitter signal / RS232
3	RxD	receive signal / RS232
4	-	free
5	-	free
6	-	free
7	DGND	data reference potential
8	-	free
9	-	free

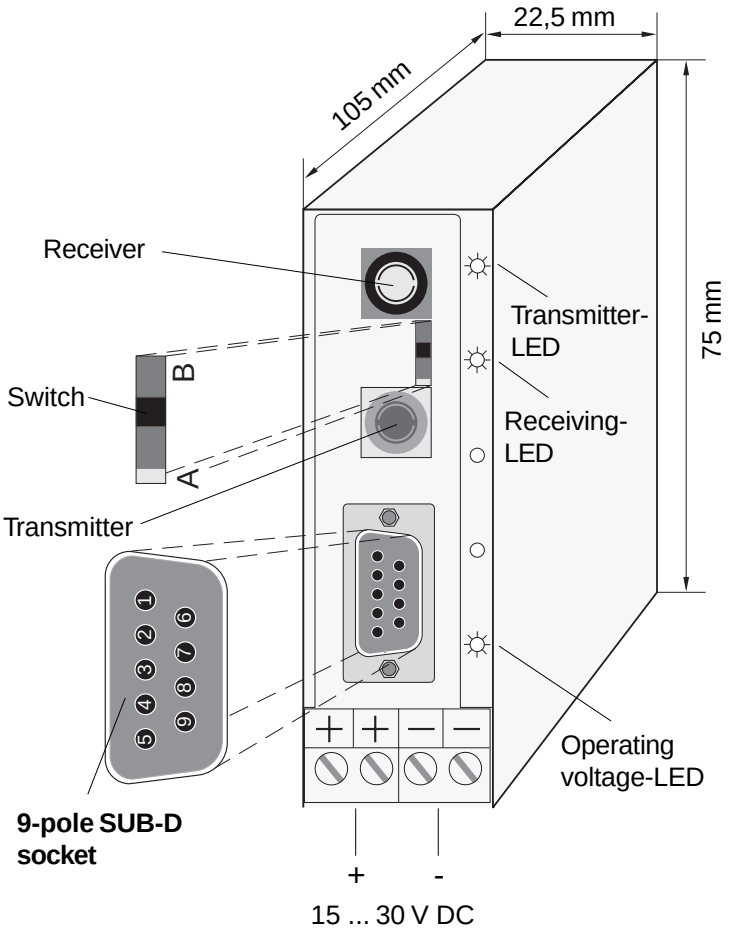

The difference between LWL-Interface Master and Slave is as follows:
The Master has a 9-pole SUB-D socket and the Slave a 9-pole SUB-D connector. It must be taken into consideration that the PIN's of the connector must be assigned in the opposite of the socket in mirror position.

The housing is on all common DIN EN mounting rails mountable.

Description
Optical Fibre Operator

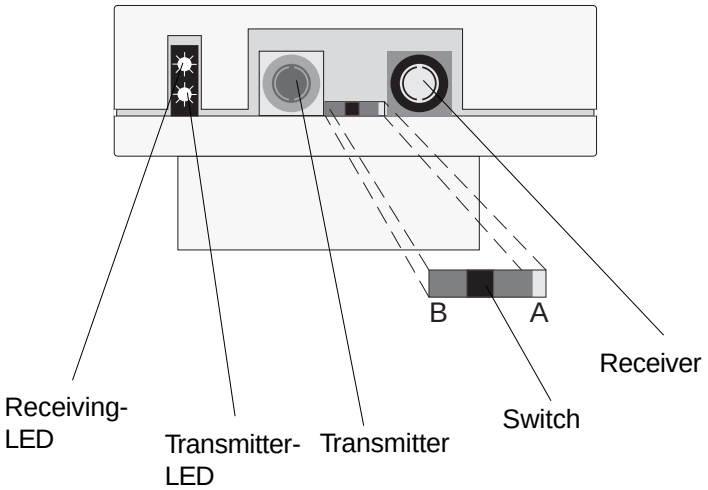

© KEB Antriebstechnik, 1996
All Rights reserved

Connection Optical Fibre BUS

Number of users = 1 ... 239

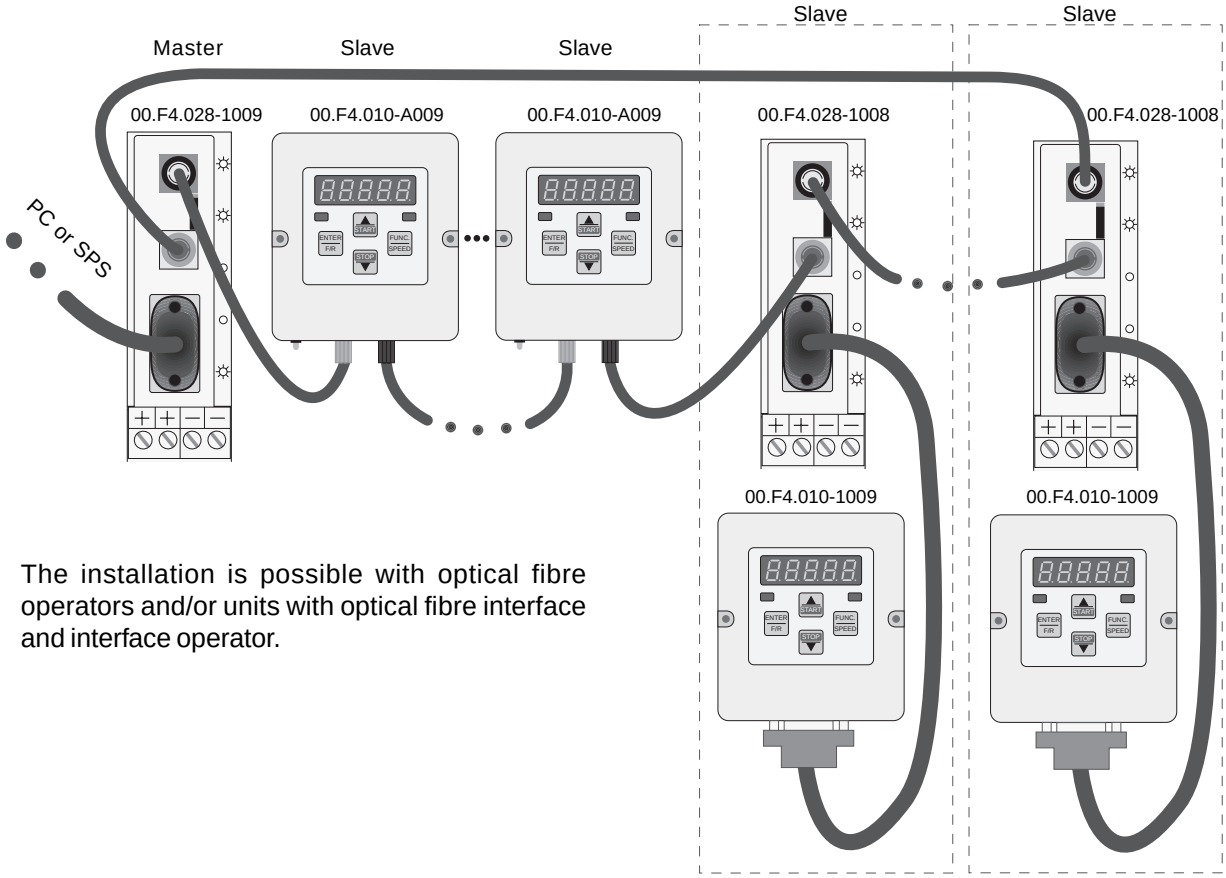

The installation is possible with optical fibre operators and/or units with optical fibre interface and interface operator.

Connection of Optical Fibre Interface to PC (or Master)

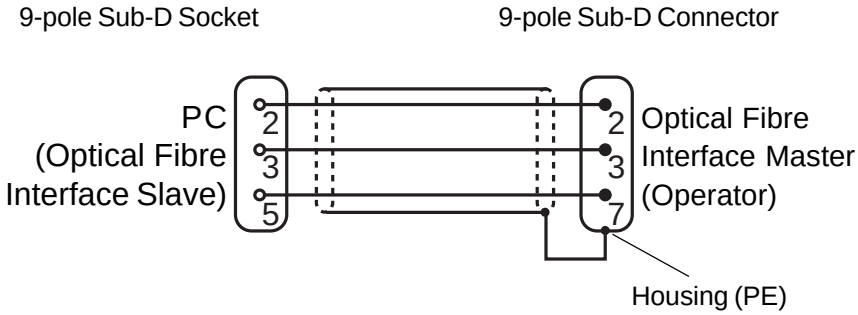

Permissible Line Length between the Users

Cable damping	Switch position A	Switch position B
0,3 dB	0 ... 42 m	3 ... 55 m
0,2 dB	0 ... 63 m	3 ... 83 m
0,1 dB	0 ... 127 m	6 ... 167 m

Tested transfer rate ⇨ 115 kBaud

! Switch position A must be used for an ambient temperature > 35 °C.

© KEB Antriebstechnik, 1996
All Rights reserved

11.1.5 InterBus Loop-Operator

The InterBus loop-operator is incorporated in a slip-on housing and is connected to a IB-loop stub. InterBus (IB) and loop are specifications of the company Phoenix Contact, Blomberg. The voltage supply is done over the loop from the series-connected loop-bus terminal via a 2-wire, twisted cable together with the modulated data signals. The isolation to the inverter is realized with optocouplers. The switching off of the inverter has no effect on the IBS cycle.
After switching on the loop-operating voltage the inverter is adjusted to the fastest possible transmission rate via the internal, serial KEB-DIN66019 protocol. For that the application password (ud.01=440) as well as the baud rate (ud.07) and the inverter address (ud.06=1) are automatically adjusted.

Picture11.1.2 InterBus Loop-Operator

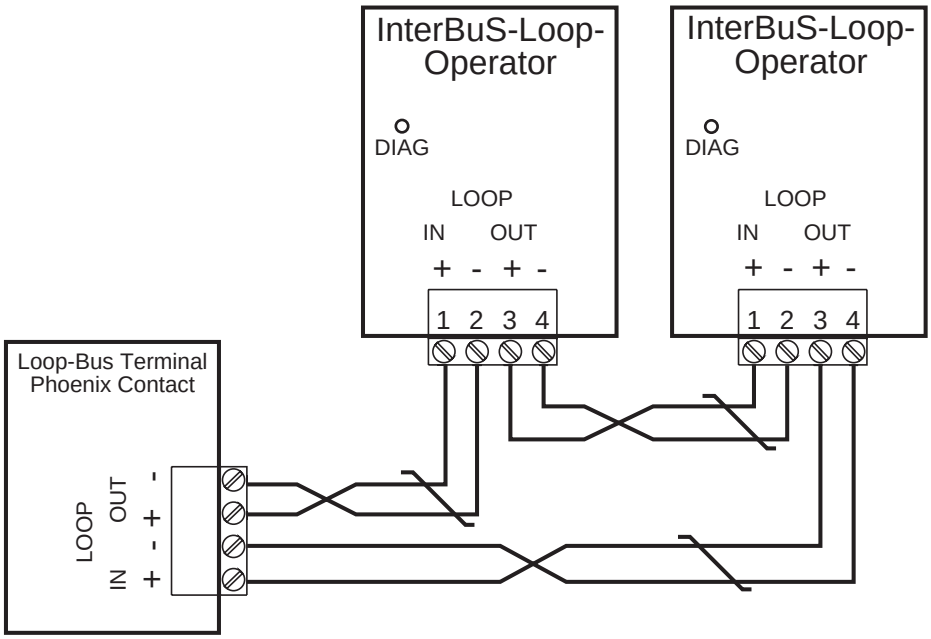

The connection of the operator to the loop is done by means of twisted, unshielded loop-cables (Phoenix Contact) according to following scheme:
terminal 1 Loop In +
terminal 2 Loop In -
terminal 3 Loop Out +
terminal 4 Loop Out -
The last user is again connected with the loop-in interface of the bus terminal (Phoenix Contact). Of course, other loop-users like digital I/O modules etc. can be connected, too. In each case the polarity as well as the data direction IN / OUT must be observed.

1. Introduction

2. Summary

3. Hardware

4. Operation

5. Parameter

6. Functions

7. Start-up

8. Special Operation

9. Error Assistance

10. Project Planning

11. Networks

12. Applikations

13. Annex

11.1 Network Components

11.2 Bus-/DRIVECOM-Parameter

11.3 Connection Examples

11.2.1 Adjustment of Inverter Address 3
11.2.2 Baud Rate 3
11.2.3 Watchdog-Time 3
11.2.4 DRIVECOM 4
11.2.5 Activating Profile Parameters . 4
11.2.6 Profile Parameters 4
11.2.7 Status- and Control Word 7

© KEB Antriebstechnik, 1996
All Rights reserved

11.2. Bus-/ DRIVECOM-Parameter

11.2.1 Adjustment of Inverter Address (ud.6)

With ud.6 the address is adjusted under which the inverter responds to „COMBIVIS“ or other controls. Values between 0 and 239 are possible, the standard value is 1. If several inverters are operated simultaneously on the bus, it becomes absolutely necessary to give each one a different address, otherwise it can result in faulty communication, since it is possible that several inverters respond. Further information is contained in the description of DIN66019-protocol.

11.2.2 Baud Rate (ud.7)

Following values are possible for the baud rate of the serial interface:

Parameter value	Baud rate
0	1200 baud
1	2400 baud
2	4800 baud
3	9600 baud
4	19200 baud
5	38400 baud
6	57600 baud

If the value for the baud rate is changed over the serial interface it can be changed again only by keyboard or after adaption of the baud rate of the master, since different baud rates of master and slave do not allow a communication.
The baud rates 5 (38400 baud) and 6 (57600 baud) are not available on all units. The function of these transfer rates cannot be guaranteed for all ambient conditions. Should problems occur with the data transmission select a transfer rate of max. 19200 baud.

11.2.3 Watchdog-Time (ud.8)

To keep a constant check on the communication, it is possible ,after the expiration of an adjustable time without incoming telegrams, to trigger an error message of the inverter. By adjusting the value 0 (off) the function can be deactivated.

11.2.4 DRIVECOM

DRIVECOM e.V. is a user group of leading manufacturer in the power transmission. Based on InterBus a uniform communication profile was defined. The following profile parameters are an extraction from it and are limited to the parameters necessary for inverter operation. The description of the entire communication profile is found in the DRIVECOM specifications.
The DRIVECOM profile offers the possibility to address units from different manufacturer via a unitform control profile. The units are then put into the various operating states by means of the DRIVECOM control word (Pr.6).

11.2.5 Activating Profile Parameters

With parameter ud.5 the operation via the DRIVECOM control word is activated or deactivated. Furthermore, it is defined how the parameter value is adjusted. When determining the pole number from the motor data the value is programmable in the sets 0...7. The control word itself is a part of the profile parameters.

ud. 5	Control word	Value adjustment	Pole number
0	Off	oP-Parameter	Pr. 4
1	On	oP-Parameter	Pr. 4
2	Off	Profile parameter	Pr. 4
3	On	Profile parameter	Pr. 4
4	Off	oP-Parameter	Motor data
5	On	oP-Parameter	Motor data
6	Off	Profile parameter	Motor data
7	On	Profile parameter	Motor data

11.2.6 Profile Parameters

Pr (PROFILE)-PARAMETER correspond to the DRIVECOM specification. They are intended exclusively for bus operation and are not visible on the display. Profile parameters can be changed without password entry.

Pr. 4	Pole number								
Adr.				min	max		?	default	
012Ah	☑	☐	☐	2	12	2	-	4	.....

Adjusts the pole number of the connected motor. Adjusted is a 4-pole motor.

Pr. 5	Error code								
Adr.				min	max		?	default	
0105h	☐	☐	☐	0	65535	1	-	-	.....

Gives out the error code in case of malfunction. The code is described in 6.1.4 „ru. 0“.

Pr. 6	Control word								
Adr.				min	max		?	default	
0106h	☑	☐	☐	0	65535	1	-	0	.....

The control word serves for the state control of the inverter by bus. In order for the inverter to respond to the control word it must be activated with parameter ud.5.

© KEB Antriebstechnik, 1996
All Rights reserved

Pr. 7	Status word								
Adr.				min	max		?	default	
0107h	☐	☐	☐	0	65535	1	-	-	.....

With the status word the state of the inverter can be read out.

Pr. 8	Speed / setpoint value								
Adr.				min	max		?	default	
0108h	☑	☐	☐	-32767	32767	1	1/min	0	.....

Adjustment of setpoint speed in rpm. The direction of rotation is defined by the sign.

Pr. 9	Speed / actual value								
Adr.				min	max		?	default	
0109h	☐	☐	☐	-32767	32767	1	1/min	-	.....

The actual speed can be read out. The direction of rotation is indicated by the sign.

Pr. 10	Speed / min. amount								
Adr.				min	max		?	default	
010Ah	☑	☐	☐	0	32767	1	1/min	0	.....

Adjustment of minimum speed for both directions of rotation.

Pr. 11	Speed / max. amount								
Adr.				min	max		?	default	
010Bh	☑	☐	☐	0	32767	1	1/min	1500	.....

Adjustment of maximum speed for both directions of rotation.

Pr. 16	Acceleration Delta speed								
Adr.				min	max		?	default	
0110h	☑	☐	☐	1	32767	1	1/min	1500	.....

Adjustment of speed change which serves together with Pr.18 for the calculation of the acceleration ramp.

© KEB Antriebstechnik, 1996
All Rights reserved

Pr. 18	Acceleration Delta time								
Adr.				min	max		?	default	
0112h	✓			0	32767	1	sec	10	

Adjustment of the time that serves for the calculation of acceleration ramp.

Pr. 25	Deceleration Delta speed								
Adr.				min	max		?	default	
0119h	✓			1	32767	1	1/min	1500	

Adjustment of speed change that serves together with Pr.27 for the calculation of the deceleration ramp.

Pr. 27	Deceleration Delta time								
Adr.				min	max		?	default	
011Bh	✓			0	32767	1	sec	10	

Adjustment of the time that serves for the calculation of the deceleration ramp.

Pr. 37	Speed reference variable								
Adr.				min	max		?	default	
0125h				-32767	32767	1	1/min	-	

Speed at the output of the ramp generator.

Pr. 38	Percent setpoint value								
Adr.				min	max		?	default	
0126h	✓			-200	200	0,61	%	0	

Setpoint setting in percent referred to Pr.39. 16383 △ 100% = Pr.39

The setpoint value is calculated according to following formula:

$$\text{Setpoint} = \frac{\text{Reference value (Pr.39)} \cdot \text{Percentual value(Pr.38)}}{100\%}$$

© KEB Antriebstechnik, 1996
All Rights reserved

Pr. 39	Percent reference value								
Adr.				min	max		?	default	
0127h	☑	☐	☐	0	32767	1	1/min	1500	.....
Definition of the speed value that applies to Pr.38 as 100% value.									

Pr. 40	Percent actual value								
Adr.				min	max		?	default	
0128h	☐	☐	☐	-200	200	0,61	%	-	.....
Indication of the actual value in percent referred to Pr.39. 16383 ≙ 100% = Pr.39									

Pr. 41	Percent reference variable								
Adr.				min	max		?	default	
0129h	☐	☐	☐	-200	200	0,61	%	-	.....
Indication of the actual value at the output of the ramp generator in percent referred to Pr.39. 16383 ≙ 100% = Pr.39									

Parameters Pr.10…Pr.27 are set-dependent. A change of parameters Pr.10…Pr.27 also causes a change of the oP-parameters!
If the oP-parameters are changed the values for the direction of rotation „forward“ are accepted by the Pr-parameters!

11.2.7 Status and Control Word

With parameter ud.5 (=1,3,5 or 7) the KEB COMBIVERT is put into the DRIVECOM mode, in which it responds to the control word (Pr.6). By means of the control word the inverter is put into defined states (grey fields in the sequence chart), which can be read out with the status word (Pr.7). Parameter Pr.6 and Pr.7 are readable and changeable only by bus.

The minimal control words for each function are listed in the sequence chart. The structure of the control word is described in the Instruction Manual *InterBus*.

Picture 11.2.4 State diagram for control word Pr.6 and status word Pr.7

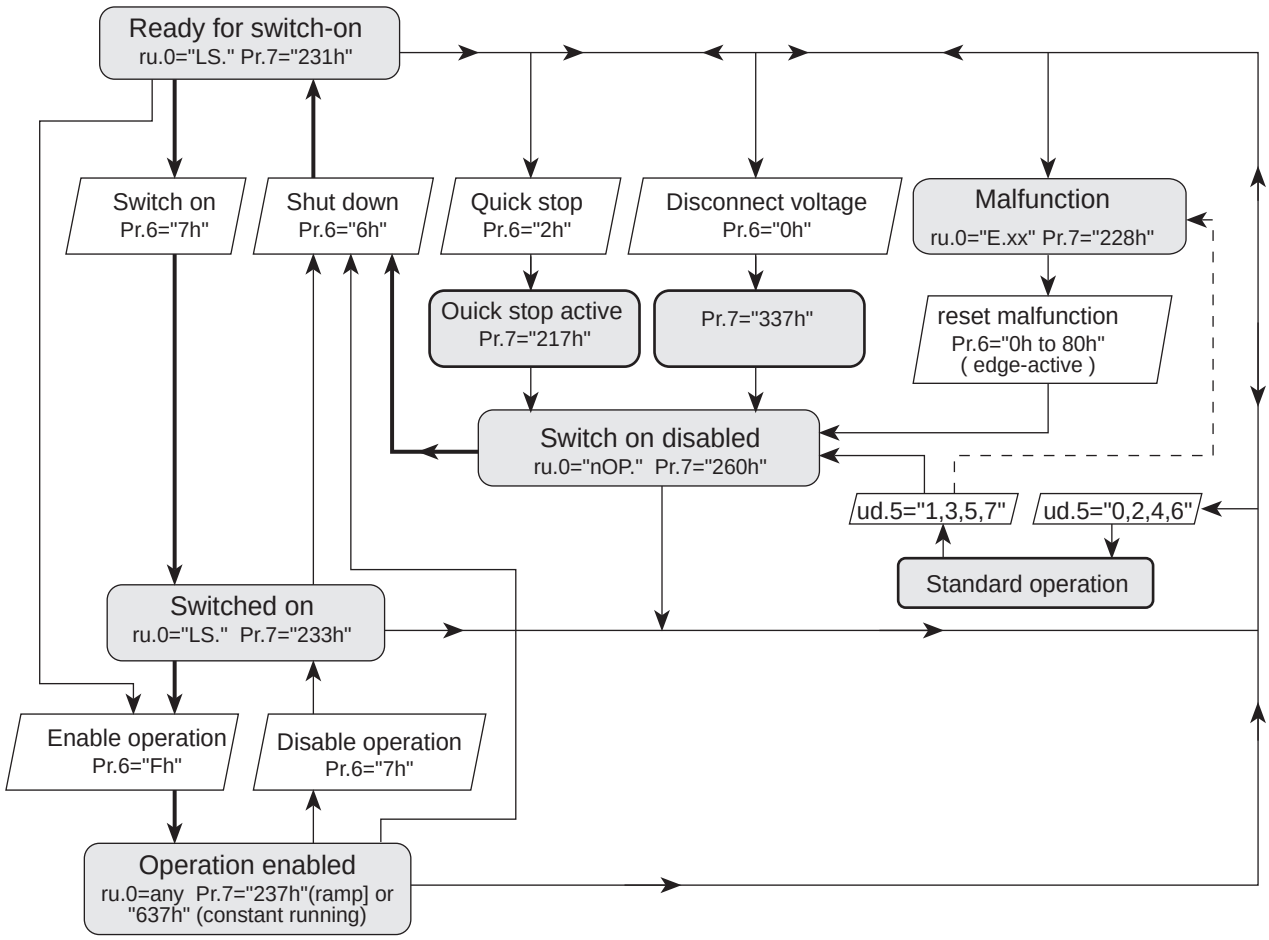

Example

Use of the control word: Reset by bus

Malfunction	**ru.0**	**z.B.**	
ud.0	=	440	Password input
ud.5	=	1	Activation of control word Pr.6
Pr.6	=	0h	
Pr.6	=	80h	Execution of reset (edge-active)
ud.5	=	0	Deactivation of control word

© KEB Antriebstechnik, 1996
All Rights reserved

1. Introduction

2. Summary

3. Hardware

4. Operation

5. Parameter

6. Functions

7. Start-up

8. Special Operation

9. Error Assistance

10. Project Planning

11. Networks

12. Applications

13. Annex

Here solved applications are filed which can be retrieved from the INTERNET http://www.keb.de.

12. Applications

1. Introduction

2. Summary

3. Hardware

4. Operation

5. Parameter

6. Functions

7. Start-up

8. Special Operation

9. Error Assistance

10. Project Planning

11. Networks

12. Applications

13. Annex

13.1 Search and Find

13.1.1 Index 3
13.1.2 Term Definition 9
13.1.3 KEB - Worldwide 11
13.1.4 Domestic Representations 12
13.1.5 Notes 13

© KEB Antriebstechnik, 1997
All Rights reserved

13. Annex

13.1 Search and Find

13.1.1 Index

Symbols

±REF 6.2.3, 6.2.7, 6.4.3, 6.4.5
230V-Class 2.1.6
400V-Class 2.1.7, 2.1.8

A

Absolute maximum frequency 6.4.9
Acceleration
  Delta
    speed 11.2.5
    time 11.2.6
  time 4.3.3, 4.3.5
Activating Brake 6.9.19
Actual
  frequency 4.3.4
    display 4.3.3
  load 4.3.3, 4.3.5
  value
    calculation % 6.11.9
    source 6.11.9
Adding set value 6.11.7
Additional Point of Support 6.5.3
An-parameter 5.1.3
An. 1 6.2.4
An. 2 6.2.7
An. 3... 5 6.2.6
An. 6 6.2.4
An. 7 6.2.4
An. 8 6.2.7
An. 9...11 6.2.6
An.12 6.2.3, 6.2.7
An.13 6.4.5
An.15...17 6.2.9
An.22 6.2.3, 6.2.5, 6.2.7, 6.2.8
An.23...25 6.2.6
An.26 6.2.4
An.27 6.2.7
Analog
  input 3.1.7, 6.2.3
  output 6.2.8
  set value 6.4.3, 6.4.5
Analog-In-Mode 6.2.5
Apparent current 6.7.9
Application Mode 4.1.3
Autoboost 4.3.3, 4.3.9, 6.11.6
Automatic Restart 6.7.7
AUX-Function
  6.2.7, 6.4.3, 6.4.4, 6.4.5, 6.4.6

B

Base-Block 6.1.7
  time 6.7.11
Basic setting 4.3.5, 7.2.4
Baudrate 11.2.3
bbL 6.9.3
Binary-coded
  set selection 6.8.5
Boost 4.3.3, 4.3.5, 6.5.3
Braking
  control 6.9.19
  modes 6.9.4
  resistors 10.1.4
Buffer memory 6.2.5
Bus
  error 6.1.5
  operator 11.1.4
Bus-/DRIVECOM-Parameter 11.2.3

C

Cable damping 11.1.7
CAN-Bus 11.1.3
  operator 11.1.3
cn. 0 6.11.4, 6.11.7, 6.11.11
cn. 3 6.10.10
cn.10 6.11.7
cn.11 6.11.7
cn.13 6.11.8
cn.13...15 6.11.7
cn.14 6.11.8
cn.16...19 6.11.3
cn.20 6.11.9
cn.21 6.11.3
cn.25 6.11.3, 6.11.4
cn.26 6.11.3, 6.11.4
cn.27 6.11.11
cn.30...32 6.11.10
Configfile number 6.1.17
Control
  cabinet 10.1.3
  card 3.1.4
  terminal strip 3.1.6
  units 3.1.3
  word 11.2.4
Controller
  action and limiting 6.11.11
  selection 6.11.4
Corner frequency 4.3.3

Counter 6.3.11
selection 6.7.9
CP-parameter 4.3.3, 6.12.4
definition 6.12.3
CRF 6.2.4
Current Counter Content 6.9.18
Customer Mode 4.1.3

D

DC
brake 6.9.3
braking 4.3.3, 4.3.10, 6.3.11
time 4.3.3, 4.3.10
link voltage 6.3.11
voltage level 6.7.3
Dead time compensation 6.7.11
Deceleration
delta
speed 11.2.6
time 11.2.6
speed 6.7.3
time 4.3.3, 4.3.6
Delta boost 6.5.4
di-Parameter 5.1.3
di. 0 6.3.5
di. 1 6.3.3
di. 2 6.3.5
di. 3 6.9.5
di. 3...10 6.3.8
di.10 6.9.5
di.14 6.3.5
di.15 6.3.4
di.16 6.3.4
di.17...19 6.3.6
di.20 6.3.7, 6.4.7
di.21 6.3.8
Diameter
compensation 6.11.10
relation 6.11.10
Differential Voltage Input 6.2.4
Digital
diameter setting 6.11.10
filter 6.3.5
inputs 3.1.7, 6.3.3
outputs 6.3.3
rotation setting 6.4.6
set value 6.4.3, 6.4.5
DIN 66019 11.1.9
Disconnecting Brake 6.9.19
Display Parameter 6.2.8
do. 0 6.3.13
do. 1 6.3.10
do. 1... 4 6.3.11
do. 4 6.3.10
do. 9 6.3.12
do.16 6.3.12
do.17 6.3.12
do.19 6.3.12
do.24 6.3.12
do.25 6.3.12
dr-parameter 5.1.3, 6.9.7
dr. 1... 4 6.6.3
dr. 2 6.7.9
dr. 5 6.6.4
dr.12 6.6.3
dr.24 6.10.7
dr.25 6.10.8
dr.29 6.10.9
dr.30 6.10.8, 6.10.10
dr.34 6.10.9, 6.10.10
dr.35 6.9.15
dr.36 6.9.15
dr.37 6.10.8, 6.10.9
dr.38 6.10.9, 6.10.10
dr.43 6.10.10
Drive-Mode 4.1.3, 4.2.4, 4.4.3
DRIVECOM 11.2.4
Dummy cap 7.1.3

E

E.co1 6.10.10
E.co2 6.10.10
E.dOH 6.1.5, 6.7.10
E.OC 6.7.3
E.OH 6.1.6
E.OL 6.1.5, 6.1.13
E.SEt 6.8.6
ED 10.1.4
Edge triggering 6.3.5
EMC 13.1.11
conform installation 7.1.3
Encoder
cable 6.10.5
interface 6.10.3
summary 6.10.3
Energy saving function 6.9.5
ENTER-parameter 4.1.4, 6.1.4
Error 6.1.5
assistance 9.1.3
code 11.2.4
messages 9.1.3

F

FAcc 6.3.11
Factory setting 4.3.3
Fade-in time 6.11.4
Fault relay 4.3.11, 6.3.10
Fixed
frequency
3.1.6, 4.3.3, 4.3.6, 6.4.11
Fr-parameter 5.1.3
Fr. 0 6.8.3
Fr. 1 6.8.3, 6.8.4
Fr. 2 6.8.5
Fr. 3 6.8.6
Fr. 4 6.8.5
Fr. 5 6.8.7
Fr. 6 6.8.7
Fr. 9 6.8.3, 6.8.4
Freezing of I-component 6.11.11
Frequency
factor 6.11.4
jump 6.9.7
level 4.3.3, 4.3.11
Function principle 2.1.3
Functional assignment 6.3.8
Fundamentals 4.1.3

G

Gain 6.2.6
Gearbox factors 6.10.10

H

Hardware 3.1.3
current limiting 6.7.3

I

In-parameter 5.1.3
In. 0 6.1.16
In. 1 6.1.16
In. 2... 6 6.1.17
In. 7...24 6.1.18
In.40 6.1.18
In.41...45 6.1.19
In.58 6.1.19
Increased setpoint value 6.9.8
Incremental encoder inputs 6.10.4
Initial Start-up 7.2.3
Initiator 6.10.10
signal 6.10.7

© KEB Antriebstechnik, 1997
All Rights reserved

Input
characteristics amplifier 6.2.6
coded set selection 6.8.6
signals 6.2.4, 6.3.3
status 6.3.8
Installation and connection 7.1.3
InterBus
Loop 11.1.9
Loop-Operator 11.1.9
Operator 11.1.3
Interface
Operator 11.1.3, 11.1.4
type 6.10.3
Introduction 1.1.7
Inverter Address 11.2.3
Inverting
inputs 6.3.5
outputs 6.3.13
conditions 6.3.12
IR compensation 6.11.6

K

Keep on running 6.7.3

L

LA-/LD-Stop 4.3.11, 6.3.11, 6.7.3
LA-Stop 13.1.11
LAS 6.3.11
LE-parameter 6.3.11
LE.35 6.9.17
LE.41 6.1.14, 6.9.18
LE.44...46 6.9.18
LE.46 6.9.17
LE.47 6.9.17
LED 4.4.3
LON-Bus 11.1.3
Operator 11.1.3

M

Maximum
constant current 4.3.3, 4.3.7, 6.7.5
frequency 4.3.3, 4.3.6
mode 6.5.3
ramp current 4.3.3, 4.3.7
Minimum
frequency 4.3.3, 4.3.6, 6.4.9
MK/MN 6.6.3
Mode of rotation setting 6.4.7
Modulation 6.5.5
Motor
data 6.6.3
potentiometer
function 6.4.5, 6.9.13, 6.9.14
target 6.9.15
presetting 6.6.3
protection electronic 6.7.9
protective relay 6.3.11
rating plate 6.6.3
stator resistance 6.6.4
Multifunction Input 6.2.4

N

Network 11.1.3
components 11.1.3
Noise Filter 6.2.4
NPN 3.1.7

O

Offset X 6.2.6
Offset Y 6.2.6
OH 4.3.11
oP-parameter 5.1.3
oP. 0 6.4.6, 6.4.8, 6.9.15
oP. 0... 7 6.4.5
oP. 3 6.4.6
oP. 4... 9 6.4.9
oP.10 6.4.12, 6.4.16
oP.11...14 6.4.13
oP.15...18 6.4.14
oP.22 6.4.11
oP.25 6.4.11
oP.26...29 6.9.14
oP.28 6.9.15
oP.31 6.9.15, 6.11.11
oP.32 6.11.11
Optical fibre
BUS 11.1.5
interface description 11.1.6
operator description 11.1.6
Option 6.2.3
Optional analog input 6.2.4
Out1 6.3.10
Out2 3.1.6, 6.3.10
Out3 6.3.10
Output
characteristics amplifier 6.2.9
condition 6.3.10
interconnection 6.3.12
signals 6.2.8, 6.3.10
terminal status 6.3.13
Over
-heating warning 6.3.10
-load warning 4.3.11, 6.3.10
-modulation 6.5.5
-temperature warning 4.3.11

P

P-component 6.9.9
Parameter 4.1.3, 5.1.3
designation 4.1.3
groups 4.1.3, 5.1.3
missing 3.1.4
non-programmable 4.1.5, 6.8.3
set 4.1.3, 6.8.3
copying 6.8.3
lock 6.8.6
ON/OFF delay 6.8.7
sets
locking 6.8.6
value 4.1.3
Password 4.2.4
input 4.3.3, 4.3.4
levels 4.2.3
structure 4.2.3
Peak load 4.3.3, 4.3.5
Percent
actual value 11.2.7
reference value 11.2.7
setpoint value 11.2.6
PI
controller 6.4.5, 6.11.3
frequency limit 6.11.11
reset conditions 6.11.3
PLS 6.3.11
Pn-parameter 5.1.3
Pn. 0... 2 6.7.8
Pn. 3 6.3.11, 6.7.9
Pn. 4... 6 6.7.3
Pn. 6 6.1.6
Pn. 7 6.7.8
Pn. 8 6.9.3
Pn. 9 6.9.3
Pn.11 6.9.3
Pn.12 6.7.5
Pn.13 6.1.6
Pn.14 6.7.5
Pn.15 6.7.9
Pn.16 6.1.5, 6.7.10
Pn.17 6.9.7, 6.9.10
Pn.18 6.9.7

Pn.19 6.9.10
Pn.33 6.9.8
Pn.34 6.9.9
Pn.36 6.9.9
Pn.38 6.9.8
Pn.42 6.9.7, 6.9.9, 6.9.10
Pn.43 6.9.10
Pn.50 6.7.7
Pn.52...58 6.9.19
PNP 3.1.7
POFF 6.3.11
Pole number 11.2.4
Power-Off 6.1.7
control 6.9.9
function 6.9.7
mode 6.3.11, 6.9.8
Pr-parameter 5.1.3
Pr. 4... 6 11.2.4
Pr. 7... 9 11.2.5
Pr. 8 6.4.5
Pr.10 11.2.5
Pr.11 11.2.5
Pr.16 11.2.5
Pr.18 11.2.6
Pr.25 11.2.6
Pr.27 11.2.6
Pr.37 11.2.6
Pr.38 6.4.5, 11.2.6
Pr.39...41 11.2.7
Profibus-DP 11.1.3
Operator 11.1.3
Profile parameter 6.4.5, 11.2.4
Project Planning 10.1.3
PTC-Warning 6.3.11

R

rAcc 6.3.11
Ramp
generator 6.4.12
mode 6.4.12, 6.4.16
stop 4.3.7, 6.3.11, 6.7.3
activation 6.7.3
Rated
motor
current 6.6.3, 6.7.9
frequency 6.6.3
output factor 6.6.3
speed 6.6.3
voltage 6.6.3
point 6.5.3
Ready-for-operation
signal 4.3.11
Record of changes 1.1.15
REF
4.3.12, 6.2.3, 6.2.7, 6.4.3, 6.4.5
Gain 6.1.18
Offset 6.1.18
Relay output 4.3.3, 4.3.11
Reset-Mode ST 6.3.8
Resetting of
error messages 4.1.5
peak values 4.1.5
Restart
delay 6.9.10
frequency 6.9.10
Rotation
presetting 6.3.7
setting 4.4.4, 6.4.6
RS232/485 11.1.3, 11.1.4, 13.1.11
ru-parameter 5.1.3
ru. 0 6.1.3, 6.3.11
ru. 1 6.1.8, 6.10.10
ru. 3 6.1.8, 6.3.11
ru. 4 6.1.8
ru. 6 6.4.12
ru. 7 6.3.11
ru. 9 6.7.9
ru.10 6.3.11
ru.14 6.3.4
ru.15 6.1.11, 6.3.13
ru.16 6.1.11, 6.3.8
ru.17 6.1.12
ru.18 6.1.12
ru.22 6.1.12, 6.2.3
ru.23 6.1.12, 6.2.3
ru.24 6.1.13
ru.29 6.1.13
ru.30 6.1.13, 6.4.5
ru.31 6.1.13
ru.32 6.1.13
ru.33 6.1.14, 6.9.18
ru.34 6.1.14, 6.9.15
ru.41 6.1.14, 6.2.8
ru.43 6.1.14, 6.9.23
ru.44 6.1.14
ru.45 6.1.15, 6.2.3
ru.46 6.1.15
ru.47 6.1.15, 6.10.10
Run-Signal 4.3.11

S

S-curve 6.4.14
time 6.4.14
Selection
of a parameter 4.1.4
of parameter sets 6.8.4
of set value 6.4.6
output conditions 6.3.12
setpoint value 6.2.7
Service 4.2.3
Set
-point
selection 7.2.4
signal 4.3.3, 4.3.12
digital
inputs 6.3.4
value
and ramp adjustment 6.4.3
calculation 6.4.10
calculation % 6.11.7
from PI-Control 6.4.3
from speed detection 6.4.3
limits 6.4.9
sources 6.4.5
Simulate Analog Option 6.2.7
Slip
compensation 4.3.3, 4.3.9, 6.11.6
control 6.9.8
SLL 4.3.7
Source
diameter compensation 6.11.10
parameter set 6.8.5
Special
functions 6.9.3
settings 4.3.7
Specifications 2.1.6
Speed
actual value 11.2.5
detection 6.4.5
key 4.4.3
max. amount 11.2.5
measurement 6.10.7
min. amount 11.2.5
reference variable 11.2.6
search 4.3.3, 4.3.8, 6.1.6, 6.7.7, 13.1.11
mode 6.7.7
setpoint value 11.2.5

© KEB Antriebstechnik, 1997
All Rights reserved

SSF 4.3.8
Stall 4.3.11, 6.1.6, 6.3.11, 13.1.11
function 6.7.5
Start
key 4.4.3
parameter 6.12.4
up 7.1.3
Starting jump 6.9.8
Status
display 4.3.3, 4.3.4
word 11.2.5
Stop-key 4.4.3
Strobe-dependent Inputs 6.3.6
Switch
off delay 6.7.10
on 7.2.3

T

Terminal 3.1.6
status 6.3.4
Uext 6.10.4
Testing of Drive 7.2.5
Timer
programming 6.9.17
value 6.9.17
Trouble shooting 9.1.3
Type
code 2.1.5
of modulation 6.5.5

U

ud-parameter 6.12.3
ud. 2 6.12.4
ud. 3 6.12.4
ud. 5 11.2.4
ud. 6... 8 11.2.3
ud. 9 4.4.4
ud.11 6.5.3
ud.15 6.12.4
ud.16 6.12.4
ud.88 6.9.23
ud.88...90 6.9.24
ud.91 6.9.23
Uext 3.1.6, 6.10.4
uF. 0... 3 6.5.3
uF. 4 6.5.4
uF. 5 6.5.4
uF. 6 6.9.5
uF. 7 6.9.5
uF. 8 6.5.4
uF. 9 6.5.5
uF.10 6.5.5
uF.16 6.7.3
uF.17 6.7.11
Unit conversion 6.9.23
UZK
compensation 6.5.4
level 6.3.11

V

Voltage
frequency characteristic 6.5.3
stabilization 4.3.3, 4.3.8

W

Watchdog 11.2.3
time 11.2.3

X

X1.17 6.2.4
X1.8 6.2.4
X1.9 6.2.4

Z

Zero Clamp Speed 6.2.7

© KEB Antriebstechnik, 1997
All Rights reserved

© KEB Antriebstechnik, 1997
All Rights reserved

13.1.2 Term Definition

Analog/Digital Earth

The COMBIVERT F4 has isolated digital inputs, i.e. the inputs are galvanically separated from the internal potential. Thus equalizing currents between the components are avoided. The digital earth is the reference point of this separated control circuit. The analog earth is directly connected with the inverter ground, it serves as potential for the analog setpoint setting.

EMC

Electro**m**agnetic **c**ompatibility; the guidelines for the reduction of interferences emitted by units as well as the safety of operation of troubled units.

Energy-saving Function

When motors run at no-load the voltage can be lowered once this state is reached thereby saving energy.

Frequency-dependent Switch

Relay or transistor output which switches dependent of a preadjusted frequency.

Actual value

At a closed-loop controlled system it is the feedback value supplied by the external detection. At controlled systems it is the value calculated on the basis of the adjusted conditions.

LA-Stop

Acceleration stop prevents overcurrent errors during acceleration by stopping the ramp. The current level is determined through the max. ramp current (CP.14).

RS232/485

RS232, standardized serial interface for max. 1 end unit at a max. line length of 15 m.
RS485, standardized serial interface for max. 240 end units and 1000 m line lengths.

Setpoint Value

The analog and digital preset values with which the frequency inverter shall operate.

Speed Search

Speed Search prevents overcurrent errors at the connection to rotating motors. The motor speed is indirectly determined , the inverter accelerates only after it has adapted its rotary speed.

Stall

The Stall function protects the inverter from switch off due to overcurrent at constant output frequency. On exceeding the level adjusted with CP.15 the output frequency is reduced until the value is again below the adjusted value.

© KEB Antriebstechnik, 1997
All Rights reserved

13.1.3 KEB- Worldwide

ET Tarek El Sehelly Import & Export
P.o. Box 83
ET-Mehalla El Kobra
Tel.: 0020/40243839
Fax: 0020/40235753

RA Eurotrans S.r.l.
Sarmiento 2759 - (1646)
San Fernando
RA - Pcia. de Buenos Aires
Tel.: 0054/11/4744-3366
Fax: 0054/11/4744-3366

B S.A. Vermeire Belting N.V.
Rue de la Filature, 41
B - 4800 Ensival (Verviers)
Tel.: 0032/87/322360
Fax: 0032/87/315071

BR AC Control Comércio e Servicos
Rua Angelo Giannini,13-Santa Amaro
BR - CEP 04775-130 - Sao Paulo
Tel.: 0055/11/55646579
Fax: 0055/11/55646579

RCH Tecco Andina S.A.
Maule 80
RCH-Santiago, Chile
Tel.: 0056/2/5550738
Fax: 0056/2/5558445

CHN Beijing Big Lion Machinery &
Electronics Development Co.
Dashanzi Dongzhimen Wai
CHN - Beijing P.R.
Tel.: 0086/10/64368019
Fax: 0086/10/64362011

DK REGAL-Maskin Elektro A.S.
Industrievej 4
DK - 4000 Roskilde
Tel.: 0045/46755544
Fax: 0045/46757620

GB KEB (UK) Ltd.
6 Chieftain Business Park
Morris Close
Park Farm, Wellingborough
GB - Northants, NN8 6 XF
Tel.: 0044/1933/402220
Fax: 0044/1933/400724

FIN Advancetec Oy
Malminkaari 10 B
PL 149
FIN - 00701 Helsinki
Tel.: 00358/9/70029270
Fax: 00358/9/70029279

F Société Francaise KEB
Z.I. de la Croix St. Nicolas
14, rue Gustave Eiffel
F - 94510 LA QUEUE EN BRIE
Tel.: 0033/1/49620101
Fax: 0033/1/45767495

GR ELMO L.T.D.
Power Transmission & Engineering
GR - 18, Athinon 185 40 Piraeus
Tel.: 0030/1/4221992
Fax: 0030/1/4176319

IL OMEGA Engineering Ltd.
P.O. Box 1092
IL - 44110 Kfar-Saba
Tel.: 00972/9/7673240
Fax: 00972/9/7673398

I KEB Italia S.r.l.
Via Newton, 2
I - 20019 Settimo Milanese (Milano)
Tel.: 0039/02/33500782
0039/02/33500814
Fax: 0039/02/33500790

J KEB - YAMAKYU Ltd.
15 - 16, 2 - Chome
Takanawa Minato-ku
J - Tokyo 108 - 0074
Tel.: 0081/33/445-8515
Fax: 0081/33/445-8215

J KEB - YAMAKYU Ltd.
711, Fukudayama, Fukuda
J - Shinjo-Shi, Yamagata 996 - 0053
Tel.: 0081/233/29-2800
Fax: 0081/233/29-2802

NZ Vectek International
21 Carnegie Road, Onekawa
NZ - Napier
Tel.: 0064/6/8431400
Fax: 0064/6/8430398

NL Marsman Elektronica
En Aandrijvingen BV
Zeearend 16
NL - 7609 PT Almelo
Tel.: 0031/546/812121
Fax: 0031/546/810655

N VEM Motors Norge AS
Skjäervaveien 38
N - 2011 Stroemmen
Tel.: 0047/63840910
Fax: 0047/63842230

A
H
CZ
SK KEB-Antriebstechnik Ges. m.b.H.
Ritzstraße 8
A - 4614 Marchtrenk
Tel.: 0043/7243/53586-0
Fax: 0043/7243/53586-21

P JOMARCA José Maria de
Araujo Campos & Ca. Lda
Senra - Cavaloes
P - 4760 V. N Famalicao
Tel.: 00351/52/315144
Fax: 00351/52/311430

S REVA - drivteknik AB
Slussgatan 13
S - 21130 Malmö
Tel.: 0046/4077110
Fax: 0046/4079994

CH Stamm Industrieprodukte AG
Hofstraße 106
CH - 8620 Wetzikon
Tel.: 0041/1/9325980
Fax: 0041/1/9325986

E ELION S.A.
Farell 9
E - 08014 Barcelona
Tel.: 0034/93/2982030
Fax: 0034/93/2965632

RSA Pneumatic Electric
Control Systems (PTY) Ltd.
P.O. Box 47396
Stamford Hill
RSA - Durban / Greyville 4023
Tel.: 0027/31/3033701
Fax: 0027/31/23-7421

R.O.C. URGTEK Co., Ltd.
No.19-5, Shi Chou Rd,TounanTown
R.O.C. - Yin-Lin Hsian, Taiwan
Tel.: 00886/5/597 5343
Fax.: 00886/5/596 8198

TH INNOTECH Solution Co. Ltd.
518 Nec Buildung, 5th Floor
Ratchadapisek Road
TH - Huaykwang, 10320 Bangkok
Tel.: 0066/2/9664927
Fax.: 0066/2/9664928

TN H 2 M
13, Rue El Moutanabi
TN - 2037, El Menzah 7
Tel.: 00216/1/860808
Fax: 00216/1/861433

TR TEPEKS Elektronik Sanayi Ve
Ticaret Ltd. Sirketi
Harman Cad. Ali Kaya Sok. No. 4
POLAT Plaza B. Blok Kat 5
TR - 80640 Levent, Istanbul
Tel.: 0090/212/3252530
Fax.: 0090/212/3252535

USA KEBCO Inc.
1335 Mendota Heights Road
USA - Mendota Heights, MN 55120
Tel.: 001/651/4546162
Fax: 001/651/4546198

13.1.4 Domestic Representations

New Federal Lands
KEB Antriebstechnik GmbH & Co. KG
Wildbacher Str. 5
08289 Schneeberg
Tel.: 0 37 72 / 67-0
Fax: 0 37 72 / 6 72 81

New Federal Lands
Ing. Büro Schumer & Partner
Gottschallstr. 11
04157 Leipzig
Tel.: 03 41 / 9 12 95 11
Fax: 03 41 / 9 12 95 39

Hamburg Schleswig-Holstein Bremen
KEB-Vertriebsbüro Nord
Mr. Haase
Knüll 9a
21698 Bargstedt
PF: 11 12 / PLZ: 21694 Harsefeld
Tel.: 0 41 64 / 62 33
Fax: 0 41 64 / 62 55

NRW East
KEB-Antriebstechnik
Vertriebsbüro West
Gartenstraße 18
33775 Versmold
Tel.: 0 54 23 / 94 72-0
Fax: 0 54 23 / 94 72-20

NRW West
Ing. Büro für rationelle Antriebe
Horst Thomalla GmbH
Vorsterstraße 448
41169 Mönchengladbach
Tel.: 0 21 61 / 55 62 62
Fax: 0 21 61 / 55 78 68

Hessen partially Rheinland-Pfalz
Heinrich Stanlein
Ingenieurbüro GmbH
Am Hasengarten 12
35745 Herborn-Hörbach
Tel.: 0 27 72 / 9 40 50
Fax: 0 27 72 / 5 35 76 + 8 23 46

Saarland partially Rheinland-Pfalz
KEB Vertriebsbüro Süd-West
Mr. Heinert
Kirschsteinanlage 2
55543 Bad Kreuznach
Tel.: 06 71 / 4 67 23
Fax: 06 71 / 4 68 76

Baden-Württ.
Laipple / Brinkmann GmbH
Mr. Laipple
Ziegelhau 13
73099 Adelberg
Tel.: 0 71 66 / 9 10 01-0
Fax: 0 71 66 / 9 10 01 26

Bavaria South
KEB-Antriebstechnik
Vertriebsbüro Süd
Wehrstraße 3
84419 Schwindegg
PF: 37 / PLZ: 84417
Tel.: 0 80 82 / 57 32 + 58 37
Fax: 0 80 82 / 57 30

Bavaria North
KEB-Vertriebsbüro Süd-Ost
Ajtoschstr. 14
90459 Nürnberg
Tel.: 0911 / 4 59 62 97
Fax: 0911 / 4 59 62 98

© KEB Antriebstechnik, 1997
All Rights reserved

13.1.5 Notes

© KEB Antriebstechnik, 1997
All Rights reserved

ANTRIEBSTECHNIK

Karl E. Brinkmann GmbH
Försterweg 36 - 38 • D - 32683 Barntrup
Telefon 0 52 63 / 4 01 - 0 • Telefax 4 01 - 116
Internet: www.keb.de • E-mail: info@keb.de

© KEB 0C.F4.0DA-K220 01/99